DAELIM

SERVICE MANUAL

SERVICE MANUAL

cordi

cordi

DAELIM MOTOR CO.,LTD.

- HEAD OFFICE (FACTORY)
  #58, SUNG SAN-DONG, CHANGWON, KYUNGNAM, KOREA
  TEL : (82-55) 239-7000 / FAX : (82-55) 239-7524
- OVERSEAS SALES OFFICE
  #13-5, SUNG SOO 1DONG 1GA, SUNG DONG GU, SEOUL, KOREA
  TEL : (82-2) 498-6465 / FAX : (82-2) 467-9997

DAELIM MOTOR

SM49-0406-01E

HOW TO USE THIS MANUAL

This manual describes effective maintenance procedure for the Cordi manufactured by DAELIM Motor Co., Ltd.
To ensure safety and optimal operating conditions of the vehicle, carry out regular inspections according to the maintenance schedule (Section 2).
Sections 1 through 2 provide information on overall vehicle; section 3, assembly and disassembly procedures for external components, and section 4 describes maintenance procedure for the engine, frame and electrical systems.
To facilitate use of this manual, each page starts with disassembly and system diagrams, service information, and troubleshooting guide. If you cannot find the cause of trouble, refer to Section 18: Troubleshooting.

- Contents of this manual and specifications are subject to change without prior notice for improvement of vehicle quality.
- No part of this publication may be reproduced without written permission of DAELIM Motor Co., Ltd.,

CONTENTS

GENERAL	SERVICE INFORMATION	1
	INSPECTIONS/ADJUSTMENTS	
	EXTERNAL PARTS	
ENGINE	LUBRICATION SYSTEM	4
	FUEL SYSTEM	
	ENGINE REMOVAL/INSTALLATION	6
	KICK STARTER/ CONTINUOUSLY VARIABLE TRANSMISSION	
	CYLINDER HEAD/CYLINDER/PISTON	
	TRANSMISSION/CRANKSHAFT/CRANK CASE	9
FRAME	FRONT WHEEL/FRONT FORK/STEERING	10
	REAR WHEEL/BRAKE/SUSPENSION	11
	BRAKE SYSTEM	1
ELECTRICAL SYSTEM	BATTERY/CHARGING SYSTEM	1
	IGNITION SYSTEM	14
	STARTING SYSTEM	1
	LIGHTS/METER/SWITCHES	16
	WIRING DIAGRAM	1
	TROUBLESHOOTING	1

Cord/

1. SERVICE INFORMATION

GENERAL SAFETY 1-1
SERVICE RULES 1-1
CAUTION WHEN WIRING 1-5
SERIAL NUMBER LOCATION 1-9
MAINTENANCE INFORMATION . . 1-10
TWIST TORQUE 1-14
SPECIALIZED TOOLS 1-16
LUBRICATION OIL 1-17
SYMBOLS 1-18
WIRING DIAGRAM 1-19

GENERAL SAFETY

⚠ WARNING

1. Do not run the engine for a long time in closed or not well-ventilated area because the exhaust gas contains toxic substances such as carbon monoxide, hydrocarbon, nitric oxide.
2. The battery fluid(lean sulfuric acid) is extremely toxic. It is dangerous if skin is exposed to it or if it enters into the eye. Be careful in handling. When exposed to the battery fluid, wash it with water and get a medical check up.(store the battery fluid in a safe place to avoid touching by the children)
3. Pay attention not to be burned and always put on the protection gears because the engine or the muffler is hot right after engine stops.
4. Gasoline is extremely flammable. Maintenance must performed in the place free of the open fire or electric spark.
5. When more than two person are working, always pay attention to other worker's action and alway have safety in mind.
6. The skin exposed to used engine oil can be a major reason of the skin cancer. Pay attention not to exposed and wash carefully with soap and water after handling.
7. If compressed air is used to clean the brake, dust scattered in the air can be breathed in by workers. Please take action not to scatter dust in the brake cleaner, etc.
8. Flammable nitrogen gas is generated during charging the battery so charging must be performed in well-ventilated area and free of the open fire and spark.

SERVICE RULES

1. Parts and lubrication oil must be DAELIM genuine or recommended parts.
2. Before maintenance, remove deposit or dust from the chasis.

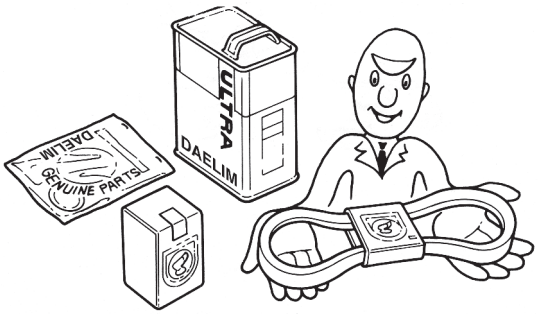

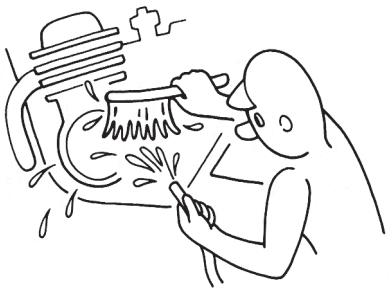

3. Store the parts of each system discriminatively to install each part in the right place.

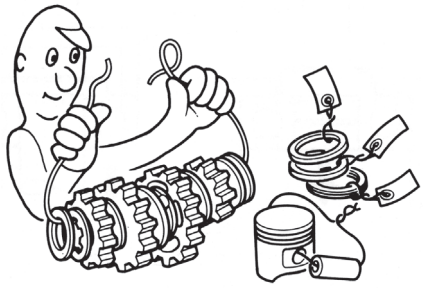

4. After removing gasket, O-ring, piston pin clip and cotter pin, always replace them with the new one. When removing the snap ring, it can be easily missed after transformation or installation.

5. Clean the parts after the overhaul and before the test and remove the cleaning oil with compressed air. Apply oil to seal face during installation.

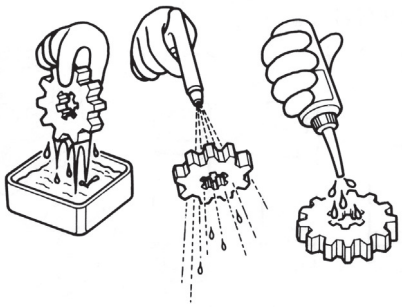

6. Check necessary place and measure necessary data during installation. When installing, return to the state before removing.

7. Align the bolts to uniform the tightening points before tightening them when you don't know the bolt length.

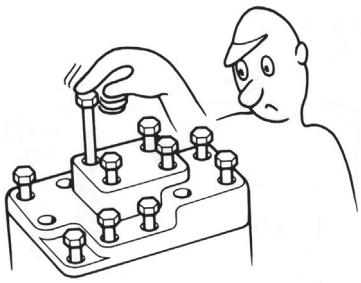

8. Bolts, nuts and pieces must be tightened from the bigger diameter to the smaller one, from inside to outside and diagonally with the specified torque.

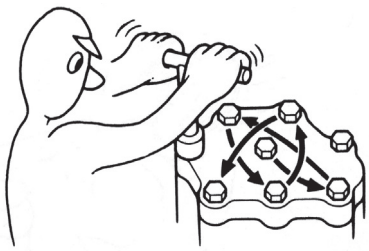

9. Check to see if the rubber part is worn out when removing it and replace it if necessary. Some rubber part is weak to gasoline and kerosene, so pay attention not to soak with gasoline or oils.

10. Recommended grease must be applied to or filled in the specified place.

11. Maintenance needed to use the specialized tools must be performed with the right tool.

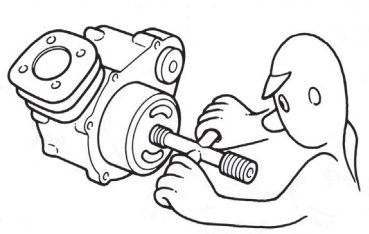

12. Never reuse the ball bearing removed with the ball applied pressure when removing press-fitted the bearing.

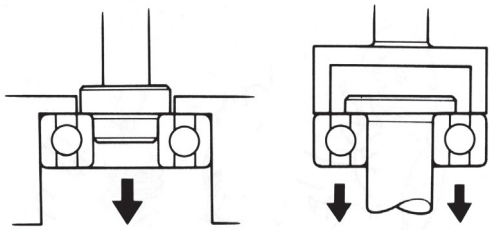

13. Check the smooth rotation of inner or outer race of the ball bearing by rotating it manually.
    - Replace the ball bearing having excessive axial/ longitudinal hanging.
    - Wipe the ball bearing likely to have hanging with cleaning oil.(except double-sided sealed type ball bearing)
    - Replace the ball bearing of which press-fitted part is slacked at the case or shaft.

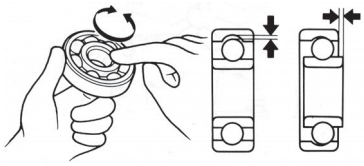

14. Pay attention to installation direction in case of the single-sided sealed ball bearing. Install the open-direction or double-sided sealed bearing in the way that the face marked with manufacturer and size should direct to the outer axle.

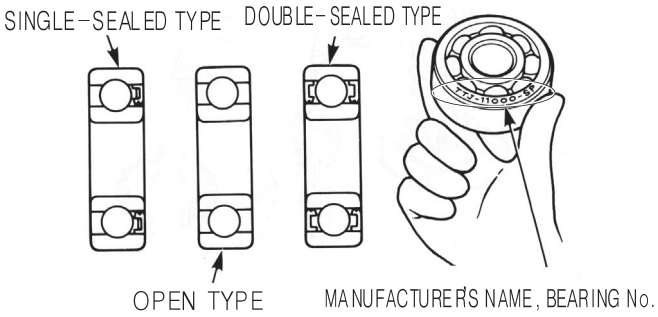

15. When blowing the ball bearing with compressed air after cleaning, keep the race from rotating. High speed rotation of the race may damage the bearing. Prior to installation, apply oil or grease to the bearing.

16. Install the snap ring so that chamfered side directs to the load-applied side. After installation, check the proper installation by rotating the snap ring.

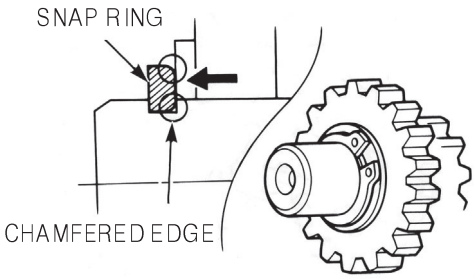

17. Check each part for proper tightening and operation after installation.

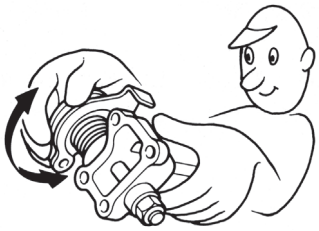

18. The brake fluid and coolant can damage the painted plastic or rubber parts. Keep these parts from contacting with them and wash these parts with water in case of contact.

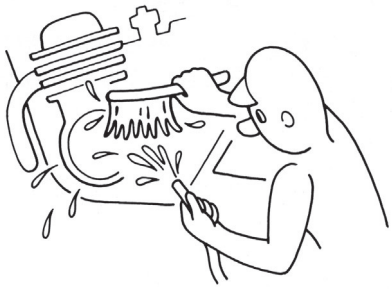

19. Install the oil seal so that the manufacturer marked surface directs outer surface.(direction not covered with oil)
    - Pay attention not to bend or damage the lip.
    - Apply the grease to the lip.

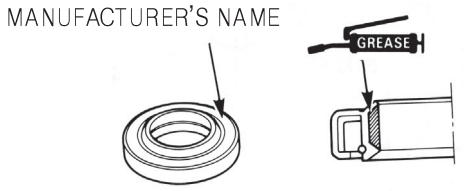

20. Connect the tube until the tube fully inserted in the joint. Install the clip if it is supplied. Replace the tube having slacked end.

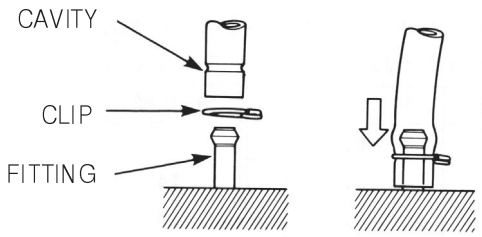

21. Keep the pneumatic system interior or the engine interior from the infiltration of dust.

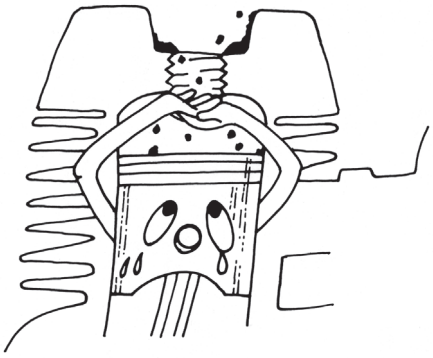

22. Install the gasket mounted in the contact surface of each case of the engine while removing gasket material completely. Remove damaged contact surface by wiping with the oil stone equally.

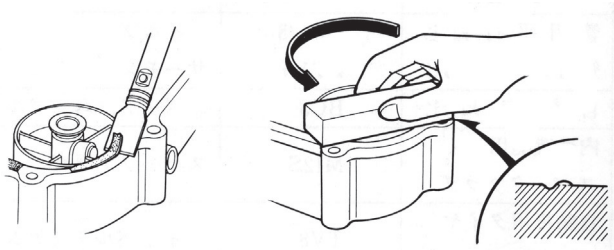

23. Pay attention not to bend the cable excessively. Transformed or damaged cable may cause malfunction or damage.

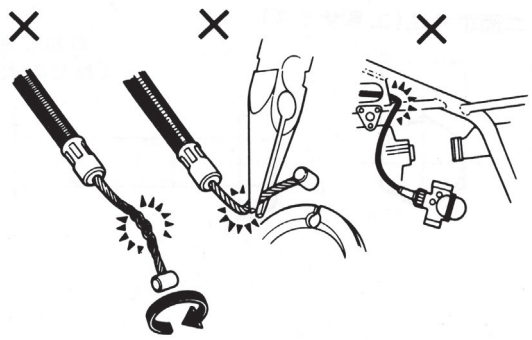

24. Install the boots with the installing groove by inserting the boots into the groove.

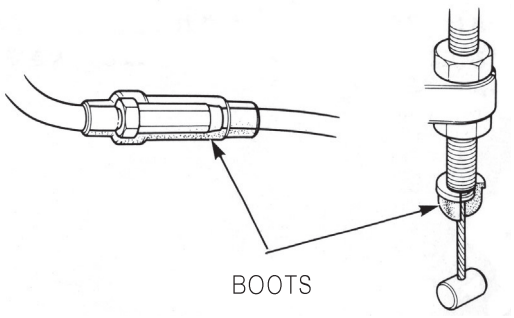

CAUTION WHEN WIRING

- Each cord must be connected depending on its color. When connecting different cord, attach color tube around the connector. Connect the coupler to the connector with same color and same pin number.
- Identify the two-colored cord by main color first and then spriped color .

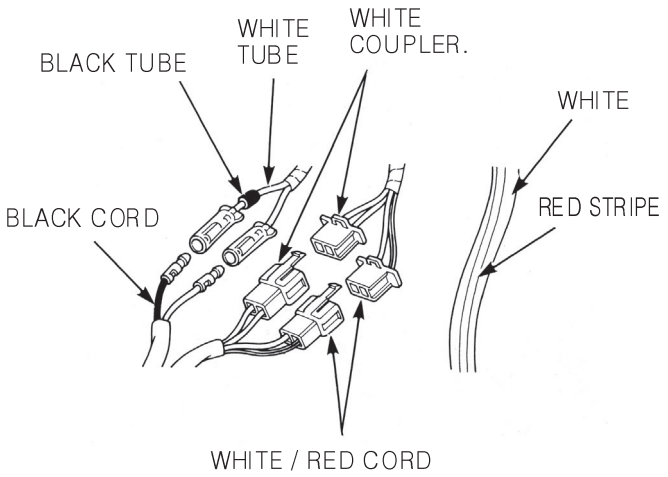

- When disconnecting the battery, the minus terminal must be disconnected first.
- Make sure that the tool such as spanner do not contact with the frame.

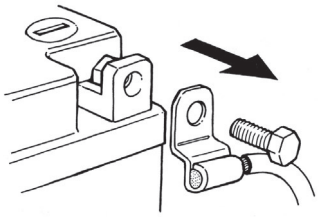

- If the fuse is short-circuited, find out the cause and repair. Replace with the fuse having the specified capacity.

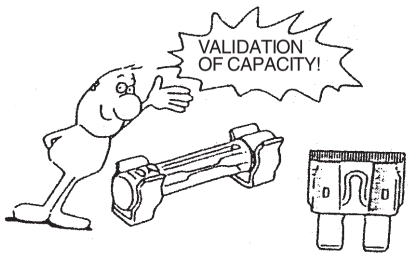

- When measuring voltage or resistance of the cord terminal using tester, contact the tester plug behind of the coupler. Pay attention not to open the cord terminal and contact the tester plug from the front of the coupler in case of water-proof coupler.

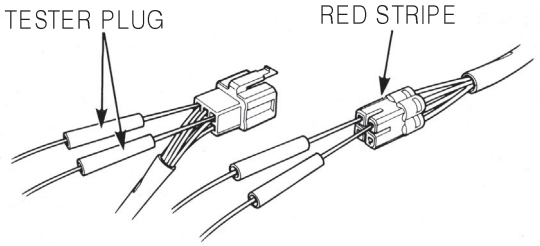

- Recheck the condition of contact, securing and continuity of each part after maintenance.
- When connecting the battery, the plus terminal must be connected first.
- After connecting the terminal, apply the grease to the terminal.

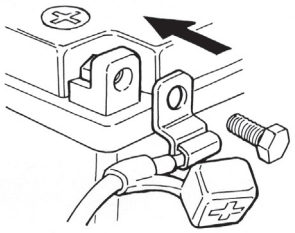

- Connect covers to the terminal after maintenance.

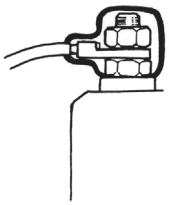

- If there is rust in the terminal, remove the rust with sand paper prior to connecting.

- Turn off the main switch before connecting/disconnecting.
- Release the lock to disconnect the lock of the coupler.
- The lock of the coupler has two types according to releasing method(press type and pull type) so release it properly according to the shape.
  - Typical releasing method of the coupler is illustrated in the following.

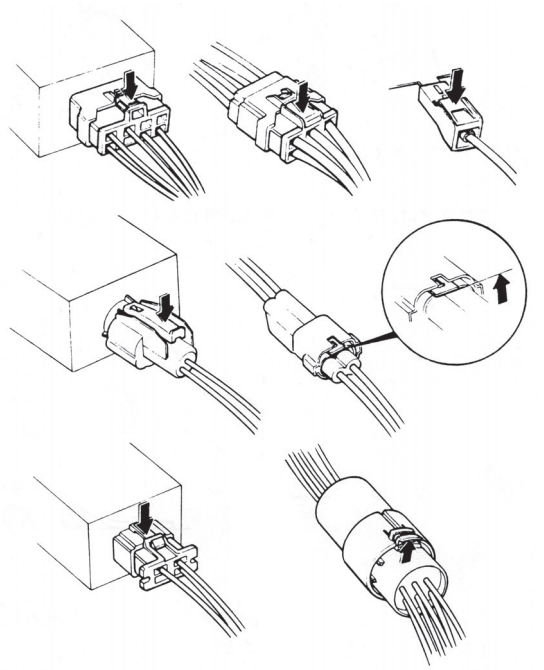

- Release the lock by inserting the coupler slightly and then narrowing connection to remove the coupler.

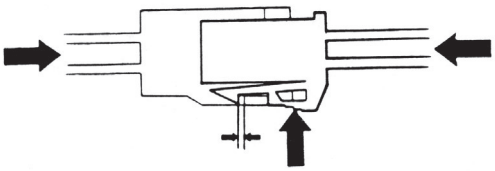

- Check to see if there is bended terminal and secure it to avoid disconnecting.

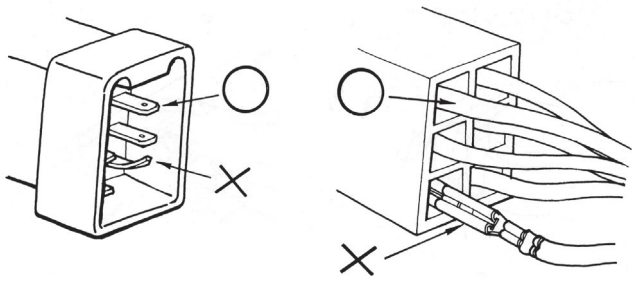

- When disconnecting the coupler, disconnect it while holding the coupler body. Pull while holding the wire harness cord and do not remove the coupler connection.

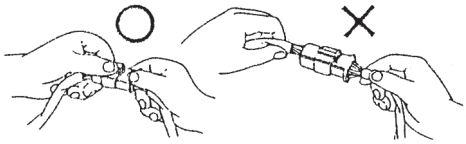

- Insert the lock of the coupler until the lock is fully secured.

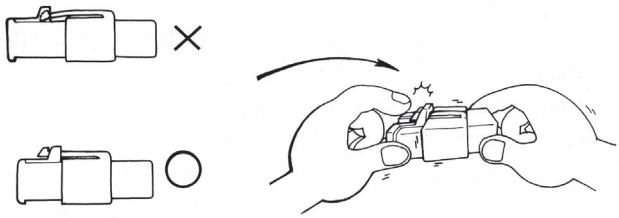

- Pay attention not to damage the vinyl cover of the coupler.

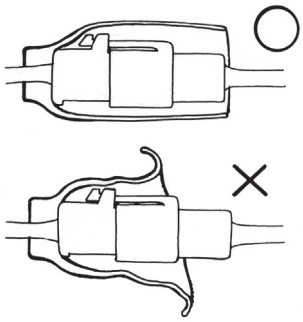

- If the wire harness coating is damaged, repair by winding vinyl tape or replace it.
- Prior to connecting the connector, make sure that the cover is not damaged and the mess terminal is not opened.

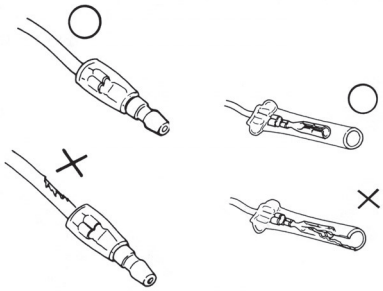

- Insert the connector until the vinyl cover is fully inserted into the terminal.
- The opening of the vinyl cover must face at the ground direction but in case of the plain connector, the draining opening must face at the sky direction.

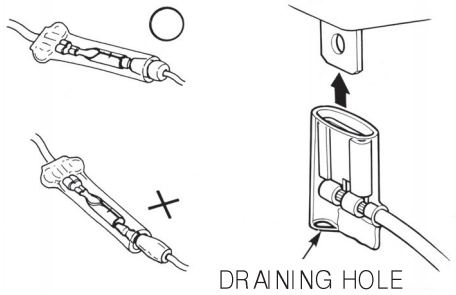

- When removing T-start, broaden the groove of T-start using the wiring driver and release the torque.
- Connect the harness and the hose to T-start and then insert until the groove is locked.
- When removing T-start from the frame, replace it with the new one.

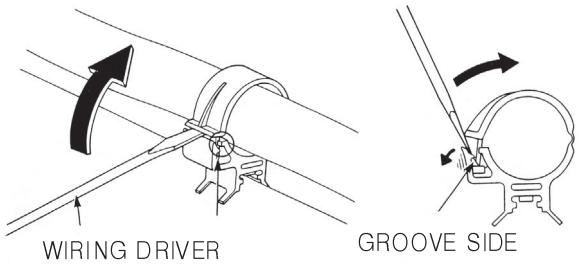

- Wire band must be secured firmly in the specified location of the frame. In case of aluminium band, secure the wire harness to the coated part.

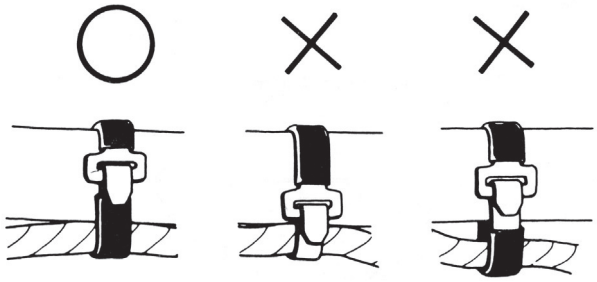

- Secure the wire harness firmly using the clamp.

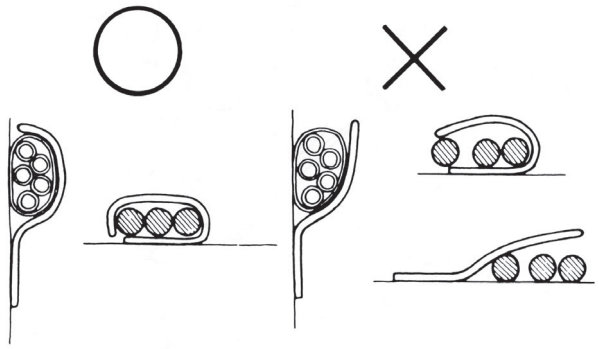

- In case of the weld clamp, do not clamp in the welded part.

- When clamping the wire harness, make sure that the harness is not contacted with the shaft or rotating part.

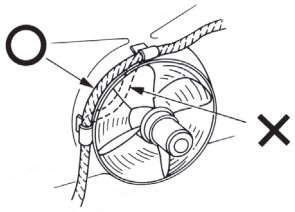

- When clamping the wire, pay attention not to contact with hot part.

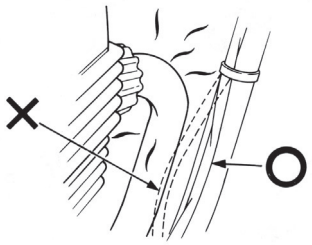

- The wire harness must be routed without contacting with the end of the lamp or any sharp edge.
- The wire harness must be routed without contacting with the end of the bolt or the piece.

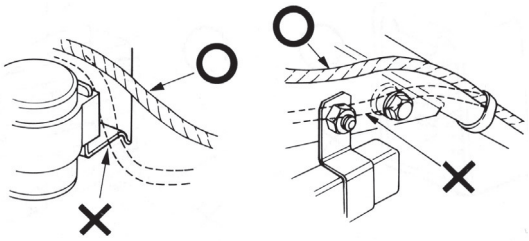

- In case that the wire harness is contacted with the end or the sharp edge, protect both parts with tube or tape.

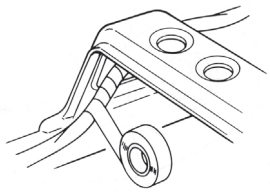

- The wire must not hang down or be pulled excessively.

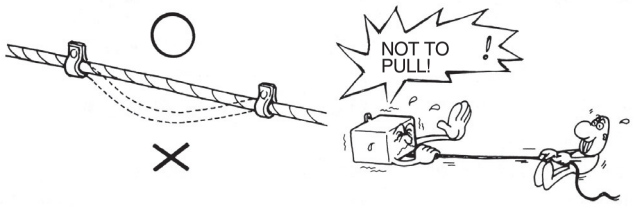

- If necessary, lock the wire harness properly.

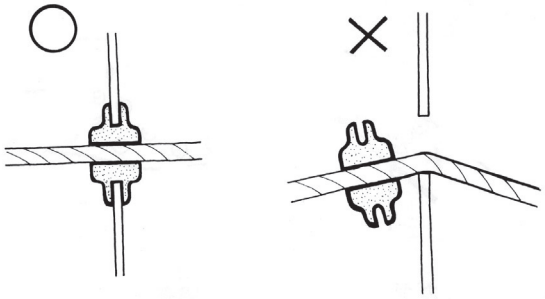

- When mounting parts, make sure that the wire harness is not pressed by the parts.

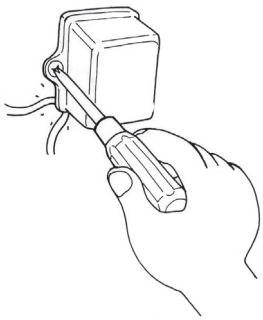

- Do not twist the wire harness.

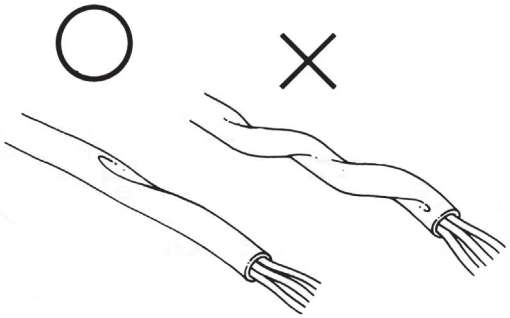

- Wire the wire harness not to be pulled or expanded when the handle is turned to the right or the left completely. Avoid excessive bending or chewing and interference with the engine.

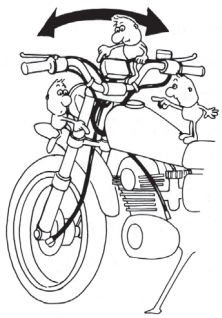

- Prior to using the tester, please read the manual carefully and understand the contents.
- When testing the resistance of the tester, the zero adjustment must be performed before testing.

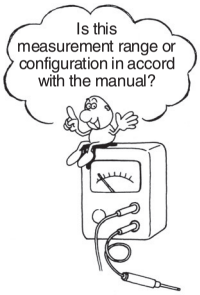

- Do not drop or throw the parts especially semiconductor contained parts because these parts may be damaged by the impact of the drop.

SERIAL NUMBER LOCATION

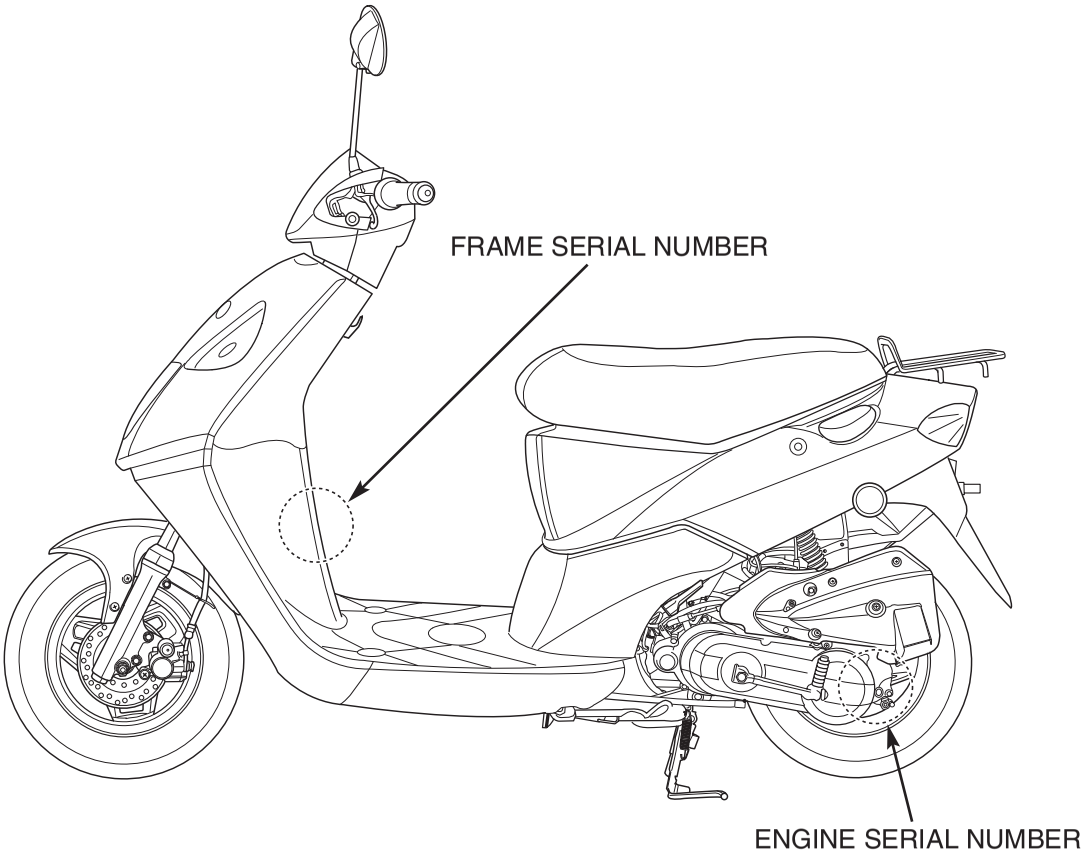

ENGINE SERIAL NUMBER LOCATION

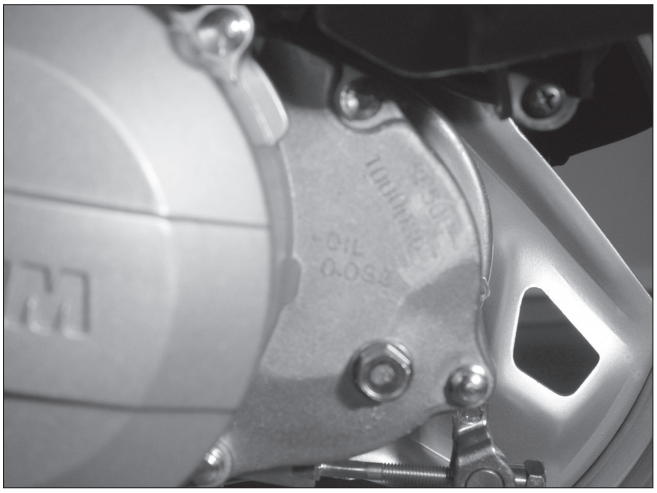

FRAME SERIAL NUMBER LOCATION

SPECIFICATIONS

ITEM		SPECIFICATIONS	ITEM	SPECIFICATIONS
TYPE OF VEHICLE		Cordi	BRAKING DISTANCE	8.0m(30km/h)
OVERALL LENGTH		1,715mm	MIN. REVOLUTION RADIUS	1,800mm
OVERALL WIDTH		665mm	COOLING TYPE	AIR-COOLED
OVERALL HEIGHT		1,053mm	STARTING	STARTER MOTOR, KICK
WHEEL BASE		1,227mm	MOTOR TYPE	2-CYCLE
MOTOR TYPE		SE50E	NO. OF CYLINDERS, MOUNTING	1 CYLINDER, TRANSVERSE
DISPLACEMENT		49.5cc	VALVE APPARATUS	READ VALVE PISTON VALVE COMBINATION
FUEL TYPE		UNLEADED GASOLINE	BORE & STROKE	40X39.4mm
DRY WEIGHT	FRONT AXLE	28.8kg	COMPRESSION RATIO	7.3:1
	REAR AXLE	47.7kg	MAX. OUTPUT	5.7PS/7,000rpm (2.95PS/6,000rpm)
	TOTAL	76.5kg	MAX. TORQUE	0.63kgf · m/6,500rpm (0.35kgf · m/5,500rpm)
PASSENGERS		1(65kg)	PRIMARY SPEED REDUCTION RATIO	3.077
GROUND CLEARANCE		105mm	SECONDARY SPEED REDUCTION RATIO	3.461
CASTER		27°	TRANSMISSION	NON STAGE TRANSMISSION
TRAIL		69mm	TRANSMISSION RATIO 1ST GEAR	2.41~0.76
FRAME TYPE		UNDER BONE		

※ "( )" MARKED CONTENTS APPLY TO EUROPE ONLY.

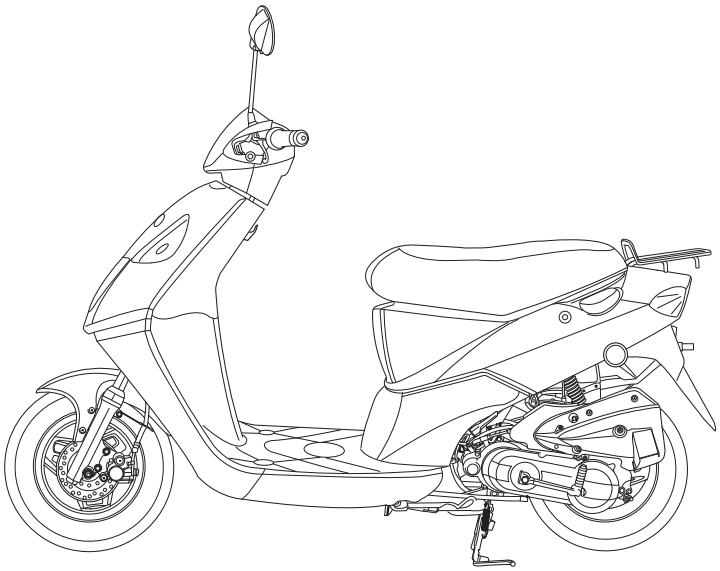

ITEM		STANDARD	USE LIMITS
LUBRICATION SYSTEM	ENGINE OIL TANK CAPACITY FULL CAPACITY RECOMMENDED ENGINE OIL TRANSMISSION OIL CAPACITY FULL CAPACITY RECOMMENDED TRANSMISSION OIL	1.2 liters Motix, 2-Cycle Oil 0.09 liters DMC Pure Mission Oil or SAE 80W/90	
LUBRICATION TYPE	OIL FILTER TYPE OIL PUMP TYPE	Separation Lubrication Current Filtration, Plunger Type	
COOLING TYPE	COOLING TYPE	Air-Cooled	
FUEL SYSTEM	FUEL TANK CAPACITY FULL CAPACITY AIR CLEANER TYPE CARBURETOR SETTING MARK VENTURI DIAMETER AIR SCREW OPENING FLOAT LEVEL IDLING RPMS NO. OF JET NEEDLES MAIN JET SLOW JET THROTTLE GRIP CLEARANCE	4.8 l Urethane Foam PA35 14mm 1 1/2 Rotation(1 1/8 Rotation) 12.2 2,000rpm 2 #77(#65) #38(#35) 2-6mm	
CYLINDER HEAD, CYLINDER, PISTON	PORT OPEN/CLOSE PERIODS INHALATION OPEN CLOSE EXHAUST OPEN CLOSE SCAVENGING OPEN CLOSE CYLINDER HEAD COMPRESSION PRESSURE CYLINDER ID MARK LOCATION INSIDE DIAMETER ID MARK(A) NO ID MARK CYLINDRICAL DEGREE OUT OF ROUNDNESS PISTON OUTSIDE DIAMETER ID MARK(A) ID MARK(B) NO ID MARK CYLINDER AND PISTON CLEARANCE PISTON PIN HOLE INSIDE DIAMETER PISTON PIN OUTSIDE DIAMETER PISTON AND PISTON PIN CLEARANCE PISTON RING GAP TOP SECOND RING MARK CONNECTING ROD SMALL END PORTION DIAMETER	Auto Control Auto Control 80.5° BBDC 80.5° ABDC 55° BBDC 55° ABDC 12.0kgf/㎠-600rpm Top of Cylinder φ40.005 ~ φ40.010mm φ40.010 ~ φ40.015mm - - φ39.955 ~ φ39.960mm φ39.965 ~ φ39.970mm φ39.960 ~ φ39.965mm 0.040 ~0.055mm φ12.002 ~ φ12.008mm φ11.994 ~ φ12.000mm 0.002 ~ 0.014mm 0.15 ~ 0.3mm 0.15 ~ 0.3mm Turning up φ17.005 ~ φ17.017mm	 0.10mm 0.10mm 17.03mm

※ "( )" MARKED CONTENTS APPLY TO EUROPE ONLY.

ITEM				STANDARD	USE LIMITS
CLUTCH	CLUTCH	AUTOMATIC		Automatic Centrifugal	
		TYPE		Continuously Variable Transmission	
		CLUTCH OUTER DIAMETER		ϕ107.0~ ϕ107.2mm	
		CLUTCH LINING THICKNESS		4.0mm	
	DRIVE BELT	WIDTH		15mm	
	MOVABLE DRIVE FACE				
		BUSH INSIDE DIAMETER		ϕ20.035~ ϕ20.085mm	
		BOSS OUTSIDE DIAMETER		ϕ20.011~ ϕ20.025mm	
		WEIGHT ROLLER OUTSIDE DIAMETER		ϕ15.92~ ϕ16.08mm	
CRANK SHAFT	DRIVEN PULLEY	FACE SPRING FREE LENGTH		ϕ98.1mm	
		FACE OUTSIDE DIAMETER		ϕ33.965~ ϕ33.985mm	
		MOVABLE FACE INSIDE DIAMETER		ϕ34.000~ ϕ34.025mm	
	CRANK SHAFT	LARGE END SIDE CLEARANCE		0.15~0.55mm	0.60mm
		CONNECTING ROD LARGE END RIGHT			
		ANGLE DIRECTION CLEARANCE		0.010~0.02mm	0.04mm
		CRANK SHAFT SHAKING	A	0.05mm(70mm from center)	0.15mm
			B	0.03mm(37mm from center)	0.10mm
FRONT, REAR WHEELS	WHEELS	RIM RUNOUT	RADICAL	-	2.0mm
			AXIAL	-	2.0mm
		AXLE DEFLECTION		-	0.2mm
	TIRES	TYPE		TUBELESS	-
		TIRE PRESSURE	FRONT	1.25 kgf/cm²	-
			REAR	2.00 kgf/cm²	-
		TIRE SIZE	FRONT	90/90-10-50J	-
			REAR	90/90-10-50J	

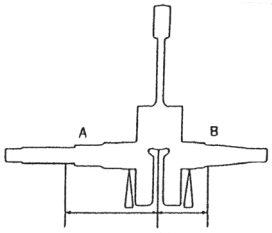

ITEM			STANDARD	USE LIMITS
BRAKES	FRONT BRAKE	LEVER FREE PLAY	10~20mm	-
		BRAKE FLUID	DOT3 or DOT4	-
		BRAKE PAD THICKNESS	-	to wear line
		DISK THICKNESS	3.0mm	2.5mm
		DISK SHAKING	-	0.3mm
		DISK WEAR LINE	2.5mm	
		MASTER CYLINDER INSIDE DIAMETER	11.000-11.043mm	11.05mm
		MASTER PISTON OUTSIDE DIAMETER	10.957-10.984mm	10.91mm
		CALIPER CYLINDER INSIDE DIAMETER	30.230-30.280mm	30.29mm
		CALIPER PISTON OUTSIDE DIAMETER	30.148-30.198mm	30.14mm
	REAR BRAKE	LEVER FREE PLAY	10~20mm	-
		DRUM INSIDE DIAMETER	95mm	95.5mm
		LINING THICKNESS	4.0mm	2.0mm
IGNITION SYSTEM	SPARK PLUG	STANDARD	BP6HS(BPR6HS)	
		OP (at low speed)	B4HSA(BR4HSA)	
		OP (at high speed)	BP7HS(BPR7HS)	
		PLUG GAP	0.6~0.7mm	
	IGNITION TIMING	F MARK	BTDC 15°/2,000rpm	
	PEAK VOLTAGE	IGNITION COIL(PRIMARY VOLTAGE)	300V ±25V	
		EXCITE COIL	over 100V	
		PULSE GENERATOR	over 2.8V	
	IGNITION COIL RESISTANCE VALUES(20℃)			
		PRIMARY COIL	0.1~0.5Ω	
		SECONDARY COIL(PLUG CAP CONNECTION)	6.3~10.3KΩ	
		SECONDARY COIL(PLUG CAP DISCONNECTION)	2.8～3.8KΩ	
	EXCITE COIL RESISTANCE VALUE(20℃)		50~200Ω	
	PLUSE GENERATOR RESISTANCE VALUE(20℃)		400~800Ω	
CHARGING SYSTEM, AC GENERATOR	AC GENERATOR	TYPE	AC	
		OUTPUT	12V-11A/5,000rpm	
		CHARGING COIL RESISTANCE VALUE(20℃)	0.4~1.0Ω	
		LIGHTING COIL RESISTANCE VALUE(20℃)	0.2~0.8Ω	
	REGULATOR/RECTIFIER	TYPE	Semi-conductor	
		CONTROL VOLTAGE LAMP SIDE	12.0~14.0V/5,000rpm	
		CHARGING SIDE	13.0~15.0V/5,000rpm	
	REGISTER RESISTANCE VALUE	REGISTER(6.7Ω 5W)	6.3-7.1Ω	

※ "( )" MARKED CONTENTS APPLY TO EUROPE ONLY.

ITEM				STANDARD	USE LIMITS
LIGHTS, METER, SWITCHES	LIGHTS, BULBS	HEADLIGHT		12V-35/35W	
		TAIL/STOP LIGHT		12V-5/21W	
		WINKER LIGHTS	FRONT	12V-10W × 2	
			REAR	12V-10W × 2	
		HIGH BEAM LAMP		12V-3W × 1	
		OIL LEVEL INDICATOR LAMP		12V-3W × 1	
		WINKER PILOTS		12V-3.0W	
		FUSE		7A	
		METER LIGHTS		12V-1.7W × 2	
		LICENCE LAMP		12V-4W × 1	
BATTERY		TYPE		MF BATTERY	
		CAPACITY		12V-3AH	
		TERMINAL VOLTAGE(20℃)		13.0~13.2V	
		CHARGING CURRENT/STANDARD		0.4A/5h	
		CHARGING CURRENT/RAPID		4A/0.5h	

TWIST TORQUE

ENGINE

TWIST PART	NUMBER	SCREW DIAMETER (mm)	TWIST TORQUE	REFERENCE
FLY WHEEL NUT	1	10	4.0kgf·m	
DRIVE FACE NUT	1	12	5.5kgf·m	
CYLINDER HEAD BOLT	4	6	1.0kgf·m	
SPARK PLUG	1	14	1.4kgf·m	
DRIVEN FACE NUT	1	28	5.5kgf·m	
CLUTCH OUTER NUT	1	10	4.0kgf·m	
OIL LEVEL CHECK BOLT	1	8	1.3kgf·m	
EXHAUST PIPE JOINT NUT	2	6	1.2kgf·m	
MUFFLER BRACKET BOLT	2	8	3.3kgf·m	
CRANK CASE BOLT	6	6	1.0kgf·m	

FRAME PARTS

TWIST PART	NUMBER	SCREW DIAMETER	TWIST TORQUE	REFERENCE
STEERING STEM LOCK NUT	1	-	7.0kgf · m	
HANDLE POST TWIST NUT	1	10	5.0kgf · m	
FRONT BRAKE LEVER PIVOT BOLT	1	6	1.0kgf · m	
FRONT BRAKE LEVER PIVOT NUT	1	6	1.0kgf · m	
REAR BRAKE LEVER PIVOT SCREW	1	5	0.3kgf · m	
REAR BRAKE LEVER PIVOT NUT	1	5	0.4kgf · m	
MASTER CYLINDER HOLDER BOLT	2	6	1.2kgf · m	
MASTER CYLINDER COVER SCREW	2	4	0.2kgf · m	
BRAKE HOSE BOLT	2	10	3.5kgf · m	
CALIPER MOUNT BOLT	2	8	2.7kgf · m	
CALIPER BREATHER VALVE	1	8	0.6kgf · m	
CALIPER PAD PIN	2	10	1.8kgf · m	
CALIPER SLIDE PIN BOLT	1	8	2.3kgf · m	
BRAKE SWITCH SCREW	1	4	0.12kgf · m	
STEERING STEM BOLT(FRONT FORK SIDE)	4	10	3.5~4.5kgf · m	
FRONT AXLE NUT	1	12	6kgf · m	
REAR AXLE NUT	1	14	11.0kgf · m	
SPEEDOMETER CABLE SETTING SCREW	1	4	0.2kgf · m	
REAR BRAKE ARM BOLT	1	6	0.6kgf · m	
FRONT BRAKE DISK BOLT	3	8	3.9kgf · m	
REAR CUSHION UPPER BOLT	1	10	4.0kgf · m	
REAR CUSHION LOWER BOLT	1	10	4.0kgf · m	
ENGINE HANGER BRACKET NUT	2	10	5.0kgf · m	
(FRAME SIDE)			(7.3kgf · m)	
EXHAUST PIPE JOINT NUT	3	6	1.2kgf · m	
MUFFLER BRACKET BOLT	2	8	3.3kgf · m	
EXHAUST PIPE PROTECTOR SCREW	4	6	0.5kgf · m	

STANDARD TWIST TORQUE

TYPE	TWIST TORQUE			TYPE	TWIST TORQUE		
	N-m	kgf-m	ft-lb		N-m	kgf-m	ft-lb
5mm BOLT, NUT	5	0.5	4	5mm SCREW	4	0.4	3
6mm BOLT, NUT	10	1.0	7	6mm SCREW	9	0.9	7
8mm BOLT, NUT	21	2.1	15	6mm SCREW FLANGE BOLT, NUT	9	0.9	7
10mm BOLT, NUT	35	3.5	25	8mm SCREW FLANGE BOLT, NUT	27	2.7	20
12mm BOLT, NUT	55	5.5	40	10mm SCREW FLANGE BOLT, NUT	40	4.0	29

Bolts not appearing in the following table are tightened using standard torque.

SPECIALIZED TOOLS

TOOL NAME	TOOL NO.	USAGE	CHAPTER
FLOAT LEVEL GAUGE	07401-001000	Carburetor Oil Level Measurement	5
BEARING DIRVER	07945-GC80000	Change of Driven Face Outer Bearing	7
BEARING REMOVER	07936-3710300	Disassembly of Driven Face Needle Bearing	
REMOVER HANDLE	07936-3710100		
REMOVER WEIGHT	07741-0010201		
DRIVER HANDLE A	07749-0010000	Assembly of Driven Face Needle Bearing	
OUTER DRIVER 24 × 26mm	07746-0010700		
CLUTCH SPRING COMPRESSOR	07960-KM10000	Disassembly/Assembly of Clutch/Driven Face	
SOCKET WRENCH 39mm	0723-03900		
CLUTCH CENTER HOLDER	07724-0050001	Disassembly/Assembly of Driven Pulley/Driven Face	
UNIVERSAL HOLDER	07725-0030000	Disassembly/Assembly of Clutch/Driven Pulley	
CRANK ASSEMBLY	0740-00001	Assembly of Drive Shaft	9
DRIVER HANDLE A	0749-0010000	Assembly of Drive Shaft Bearing	
OUTER DRIVER 37 × 40mm	07746-0010200		
DRIVER PILOT, 17mm	07746-0040400		
UNIVERSAL BEARING PULLER	0755-00001	Disassembly of Crank Shaft Bearing	
CRANK CASE PULLER	0751-00003	Disassembly of R/L Crank Case, Crank Shaft	
CRANK ASSEMBLY	0740-00001	Disassembly of R.Crank Case, Crank Shaft	
OUTER DRIVER 52 × 55mm	07746-0010400	Assembly of Crank Shaft Bearing	
DRIVER PILOT 20mm	07746-0040500		
DRIVER HANDLE A	07749-0010000		
CRANK ASSEMBLY	0740-00001	Assembly of R/L Crank Shaft Oil Seal	
LOCK NUT WRENCH A	07916-1870101	Disassembly of Top Cone Race	10
LOCK NUT WRENCH B	07916-KM10000		
BALL RACE REMOVER	07946-GA70000	Assembly of Ball Race	
OUTER DRIVER, 42 × 47mm	07746-0010300		
DRIVER HANDLE A	07749-0010000		
SHOCK ABSORBER COMPRESSER	07GM-0010000	Disassembly/Assembly of Rear Cushion	11
COMPRESSER SCREW ASS' Y	079GME-0010100		
SPRING COMPRESSER ATTACHMENT	07967-GA70102		
SPRING COMPRESSER ATTACHMENT	07JME-GW20100		
UNIVERSAL HOLDER	07725-0030000	Disassembly/Assembly of Fly Wheel	13
A.G.G ROTOR PULLER	0750-00006	Disassembly of Fly Wheel	

LUBRICATION OIL

ENGINE PARTS

APPLICATION AREAS	CAUTIONARY SUGGESTIONS	OIL TYPE
CRANK CASE JOINING FACE CRANK CASE REVOLUTION PART CYLINDER BIG REVOLUTION PART, FRICTION PART		Gasket Fluid(TB 1215) Ultra-2 Super, 2-Cycle Oil (Separation Lubrication Use)
TRANSMISSION(FINAL REDUCTION)	Capacity : 0.09 *l*	SAE 80W/90
KICK SPINDLE BUSH STARTER PINION STARTER DRIVE GEAR OPERATION PART MOVEABLE DRIVEN FACE (DRIVEN FACE OPERATION PART)	Capacity : 5.0~5.6g	Multi-Purpose Grease
OIL PUMP DRIVE GEAR		Molybdenum Grease

FRAME PARTS

APPLICATION AREAS	CAUTIONARY SUGGESTIONS	OIL TYPE
FRONT WHEEL DUST SEAL EDGES FRONT PIVOT ARM BUSH FRICTION FACE FRONT PIVOT ARM SEAL EDGES REAR BRAKE CAM AXLE PART, CAM PART WHOLE AREA OF REAR BRAKE CAM DUST SEAL REAR BRAKE ANCHOR PIN AXLE PART FRONT BRAKE OIL SEAL EDGES FRONT BRAKE CAM AXLE PART, CAM PART WHOLE AREA OF FRONT BRAKE CAM DUST SEAL SPEEDOMETER GEAR/PINION INSIDE DIAMETER PART, AXLE PART, GEAR TEETH PART BALL RACE, BEARING REVOLUTION PART		Multi-Purpose Grease
HANDLE GRIP INSIDE AXLE PART		Adhesives ROYAL BOND 1300

SYMBOLS / ABBREVIATIONS

The following symbols are used in this manual to represent job-related warnings or cautions.

SYMBOL	MEANING	SYMBOL	MEANING
⚠ WARNING	Indicates dangerous area. Serious accident may result if instructions are not followed.	⚠ CAUTION	Indicates important work. Minor injury or vehicle part damage may result if instruction are not followed.
		⚠ NOTE	Indicates general safety matters. Provides safety and appropriate handling procedures.

The following symbols indicate needed lubrication steps, the changing of parts, and required specialized tools, etc. when performing maintenance.

SYMBOL	CAUTION
OIL	Use recommended engine oil, unless otherwise specified.
MO OIL	Use molybdenum oil solution (mixture of the engine oil and molybdenum grease with the ratio 1:1)
GREASE	Use multi-purpose grease (Lithium based multi-purpose grease NLG #2 or equivalent)
M	Use molybdenum disulfide grease (containing more than 3% molybdenum disulfide, NLGI #2 or equivalent)
MP	Use molybdenum disulfide paste containing more than 40% molybdenum disulfide, NLGI #2 or equivalent)
S	Use silicone grease
LOCK	Apply a locking agent. Use the agent of the middle strength, unless otherwise specified
SEAL	Apply sealant
NEW	Replace the parts with new ones before assembly
BRAKE FLUID	Use brake fluid, DOT3 or DOT4. Use the recommended brake fluid, unless otherwise specified
FORK	Use Fork or Suspension Fluid
S TOOL	Use special tool
O.P. TOOL	Use option tool. These tools are obtained as you order parts.
(⇨3-1)	Indicates reference page. (Example : Refer to page 3-1)

Special grease, etc. that do not correspond to the above are indicated without using symbols.

WIRING DIAGRAM

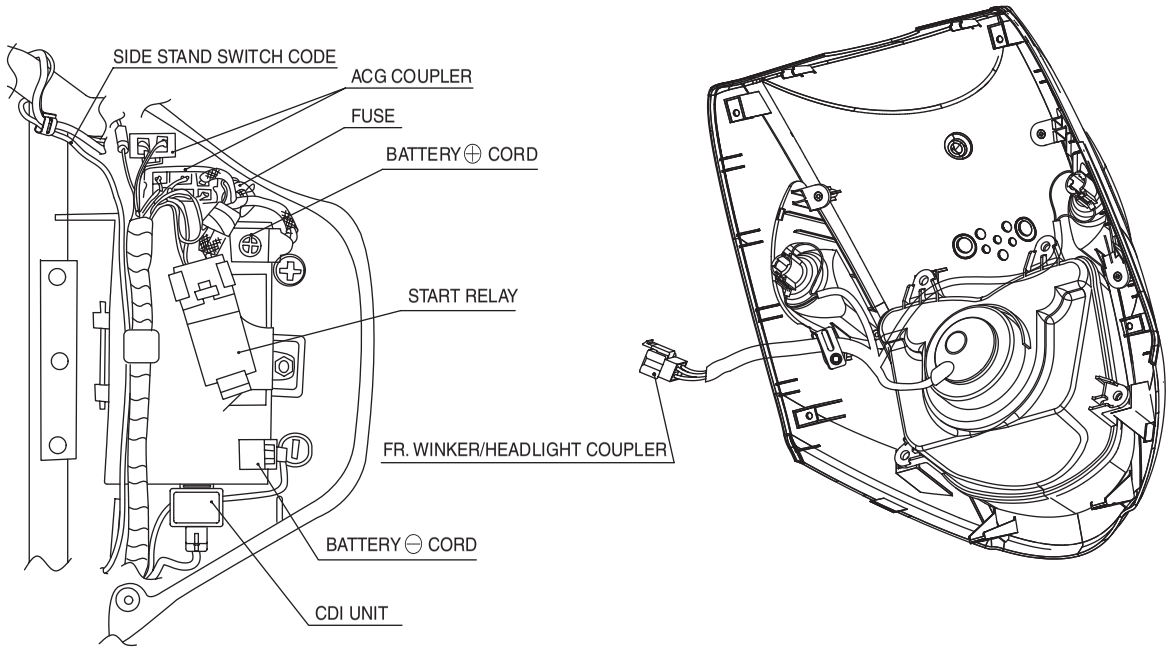

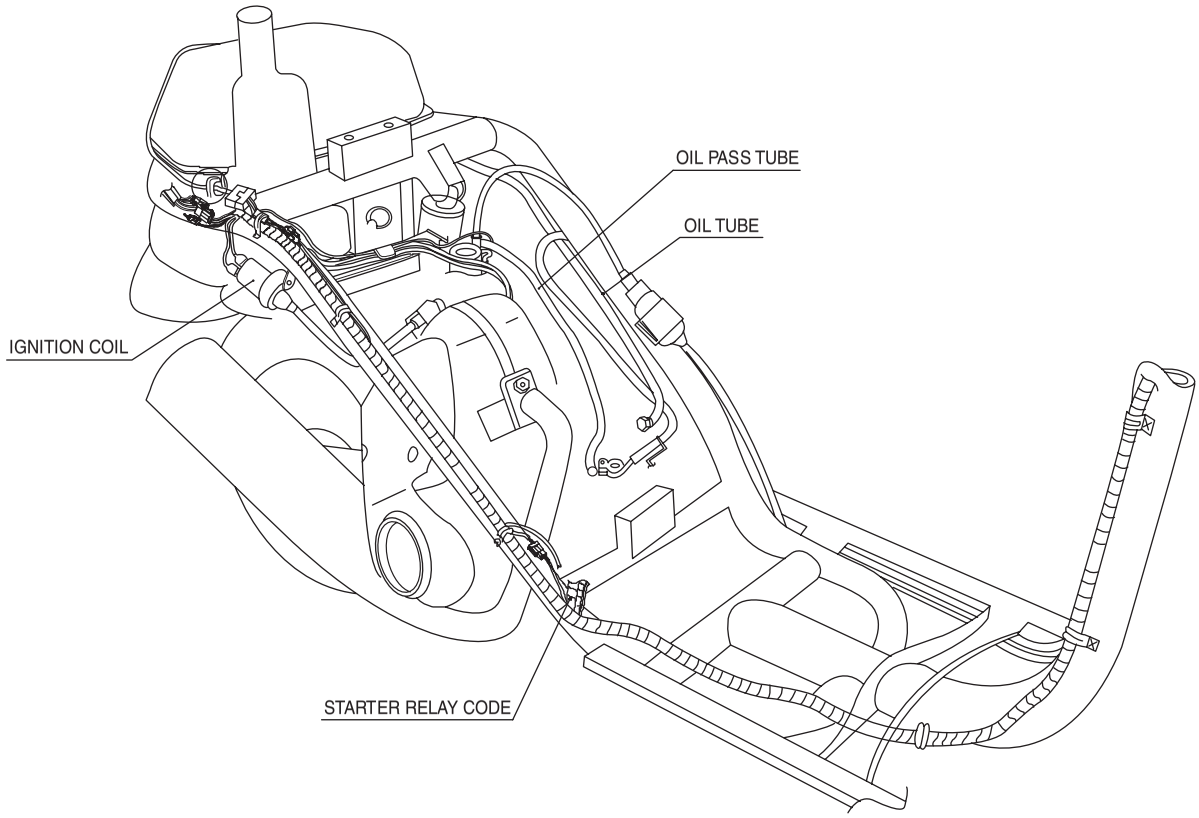

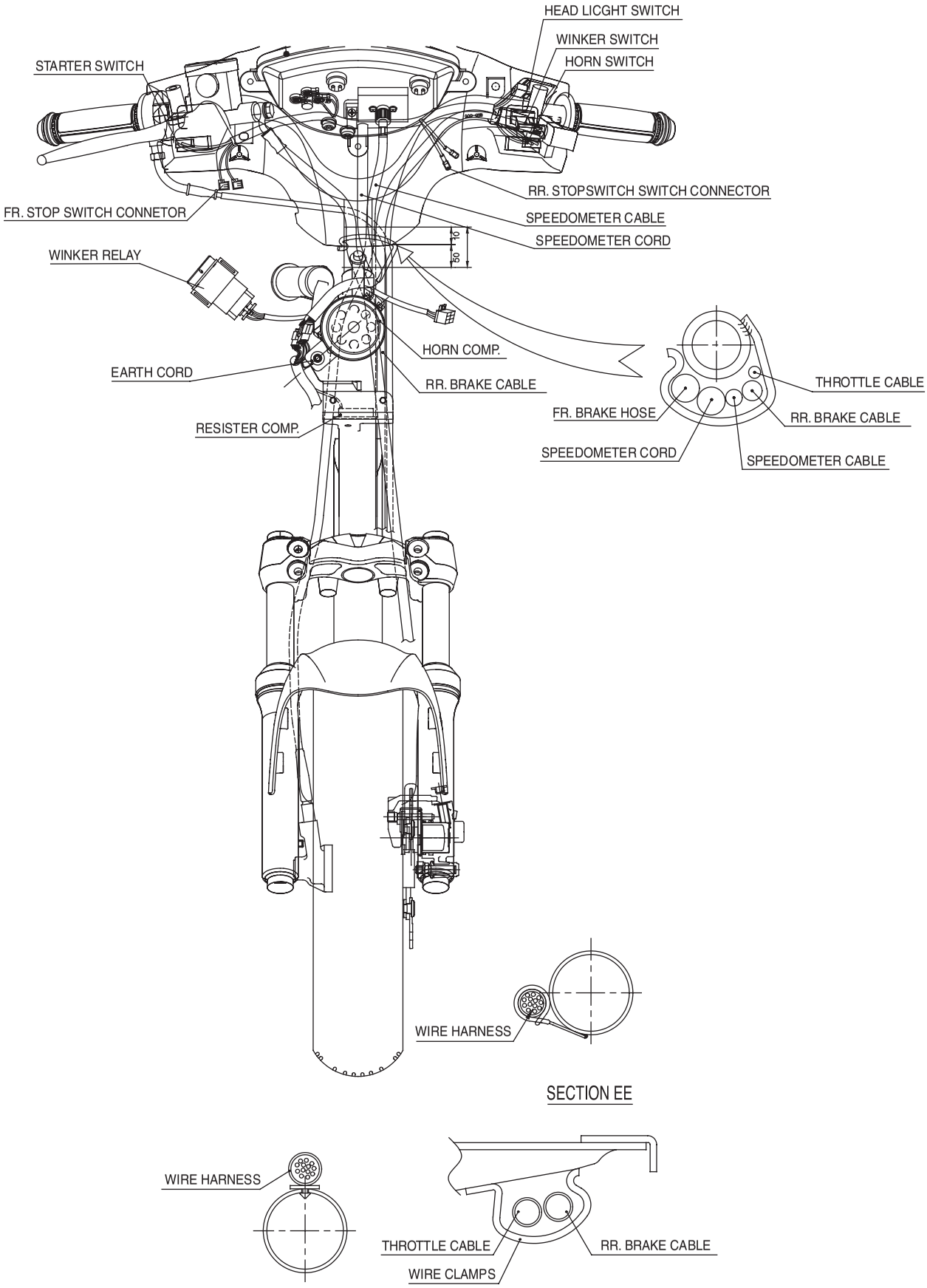
HEAD LICGHT SWITCH
WINKER SWITCH
HORN SWITCH
STARTER SWITCH
RR. STOPSWITCH SWITCH CONNECTOR
FR. STOP SWITCH CONNETOR
SPEEDOMETER CABLE
SPEEDOMETER CORD
10
50
WINKER RELAY
HORN COMP.
EARTH CORD
RR. BRAKE CABLE
THROTTLE CABLE
FR. BRAKE HOSE
RR. BRAKE CABLE
RESISTER COMP.
SPEEDOMETER CORD
SPEEDOMETER CABLE
WIRE HARNESS
SECTION EE
WIRE HARNESS
THROTTLE CABLE
RR. BRAKE CABLE
WIRE CLAMPS

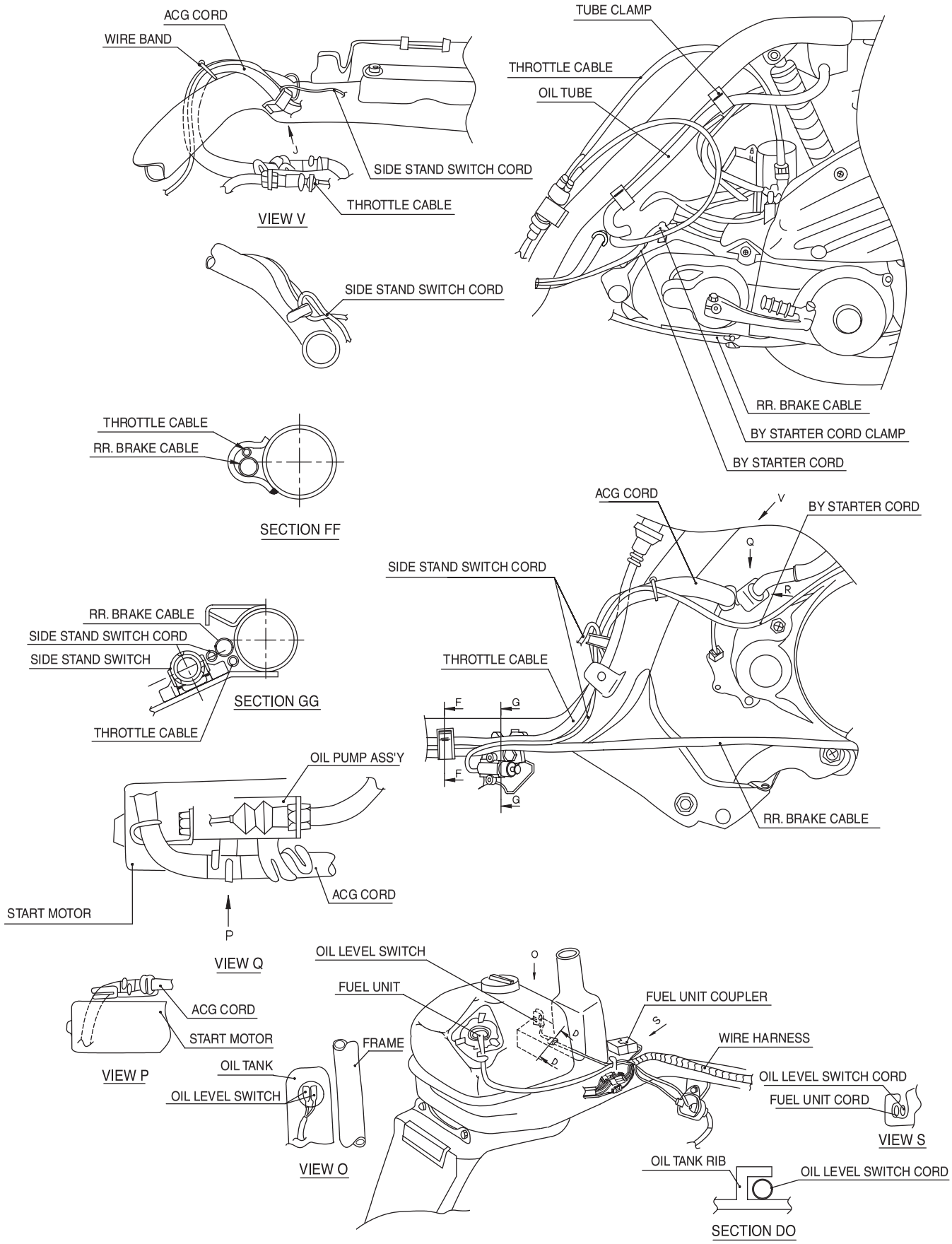
ACG CORD
WIRE BAND
SIDE STAND SWITCH CORD
THROTTLE CABLE
VIEW V
SIDE STAND SWITCH CORD
TUBE CLAMP
THROTTLE CABLE
OIL TUBE
RR. BRAKE CABLE
BY STARTER CORD CLAMP
BY STARTER CORD
THROTTLE CABLE
RR. BRAKE CABLE
SECTION FF
ACG CORD
V
BY STARTER CORD
Q
SIDE STAND SWITCH CORD
R
RR. BRAKE CABLE
SIDE STAND SWITCH CORD
SIDE STAND SWITCH
SECTION GG
THROTTLE CABLE
THROTTLE CABLE
F
G
F
G
RR. BRAKE CABLE
OIL PUMP ASS'Y
ACG CORD
START MOTOR
P
VIEW Q
OIL LEVEL SWITCH
O
FUEL UNIT
FUEL UNIT COUPLER
S
ACG CORD
START MOTOR
VIEW P
FRAME
WIRE HARNESS
OIL TANK
OIL LEVEL SWITCH
OIL LEVEL SWITCH CORD
FUEL UNIT CORD
VIEW S
VIEW O
OIL TANK RIB
OIL LEVEL SWITCH CORD
SECTION DO

MEMO

2. INSPECTIONS/ADJUSTMENTS

SERVICE INFORMATION · · · 2-1
REGULAR INSPECTION SCHEDULE · 2-2
FUEL LINE (FUEL TUBE) · · 2-3
FUEL LINE FOR CLOGGING · 2-3
THROTTLE GRIP OPERATION · · 2-4
AIR CLEANER · · · · · · · · 2-4
SPARK PLUG · · · · · · · · · · 2-5
CYLINDER COMPRESSION PRESSURE · 2-6
CARBURETOR IDLING · · · · 2-6
AIR SCREW ADJUSTMENT · · 2-6
BRAKE FLUID · · · · · · · · · 2-7
BRAKE PAD/SHOE · · · · · · 2-7
BRAKE SYSTEM · · · · · · · 2-8
HEADLIGHT ADJUSTMENT · 2-8
SIDE STAND · · · · · · · · · · 2-9
SUSPENSION · · · · · · · · · 2-9
BOLTS, NUTS, FASTENERS · · · 2-9
WHEELS/TIRES · · · · · · · · 2-9
STEERING HEAD BEARING · · 2-10
BATTERY · · · · · · · · · · · ·2-10

SERVICE INFORMATION

⚠ WARNING

- The exhaust gas contains poisonous substance. Do not keep engine idling in a closed or poorly ventilated place for a long period of time.

⚠ NOTE

- Stand the main stand prior to beginning work.

SPECIFICATIONS

ITEM	STANDARD VALUE	REFERANCE
THROTTLE GRIP FREE PLAY	2-6mm	
SPARK PLUG	BPR6HS	
SPARK PLUG GAP	0.6 0.7mm	
CARBURETOR IDLE SPEED	2,000rpm	
CYLINDER COMPRESSION PRESSURE	12kgf/cm² (600rpm)	

TORQUE VALUES

SPARK PLUG 1.4kgf · m
CYLINDER HEAD COVER BOLTS 1.0kgf · m

REGULAR INSPECTION SCHEDULE

Carry out pre-operation check at each scheduled maintenance period based on the information described in the owner's manual.
I : INSPECT AND CLEAN, ADJUST, LUBRICATE OR REPLACE IF NECESSARY.
R : REPLACE L : LUBRICATE C : CLEAN

ITEM \ FREQUENCY		ODOMETER READING(NOTE 1)					REMARK
		x 1000Km	1	4	8	12	
		MONTH		6	12	18	
	FUEL LINE(FUEL TUBE)			I	I	I	
	THROTTLE GRIP OPERATION		I	I	I	I	
	OIL PUMP, OIL LINE			I	I	I	
	AIR CLEANER			C	C	C	NOTE 2
	SPARK PLUG			I	I	I	
	CARBON REMOVAL		Every 8,000 : C				
	CARBURETOR IDLE SPEED		I	I	I	I	
	TRANSMISSION OIL					R	
	BRAKE SHOE/PAD WEAR		I	I	I	I	NOTE 3
	BRAKE SYSTEM		I	I	I	I	
	BRAKE STOP SWITCH		I	I	I	I	
	HEADLIGHT ADJUSTMENT			I	I	I	
	CLUTCH SHOE WEAR			I	I	I	
	SUSPENSION			I	I	I	
	BOLTS, NUTS, FASTENERS		I		I		
	WHEELS/TIRES		I	I	I	I	
	STEERING HEAD BEARING		I		I		
	DRIVE BELT			I	I	I	
	WEIGHT ROLLER			I	I	I	
	SLIDE PIECE			I	I	I	
	DRIVEN FACE				I		
	MOVEABLE DRIVE FACE			I	I	I	

If there are no appropriate type of tools and maintenance data available, or if you do not have mechanical technology contact authorized maintenance shops, dealers or other designated repair shops for maintenance and inspections.
To ensure safety, inspections and maintenance of these parts must be carried out by authorized maintenance shops, dealers or other designated repair shops.

NOTE

1. After the odometer reading exceeds 12,000km, repeat maintenance service at intervals indicated in the table.
2. After riding in areas with high humidity or pollution, carry out maintenance service more frequently.
3. Replace every 2 years. Proper technology is required for this job.

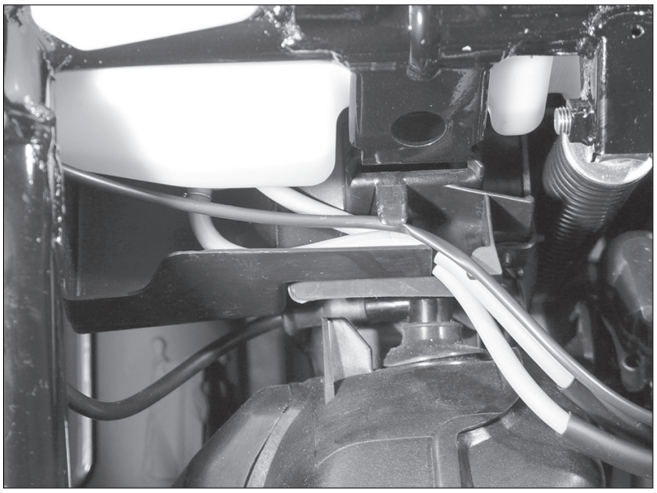

FUEL LINE(FUEL TUBE)

Remove the luggage box.(⇨3-3)
Check the fuel tube of the fuel auto cock connected to the fuel tank and carburetor. If the fuel tube is cranked, damaged or leaks, replace it.

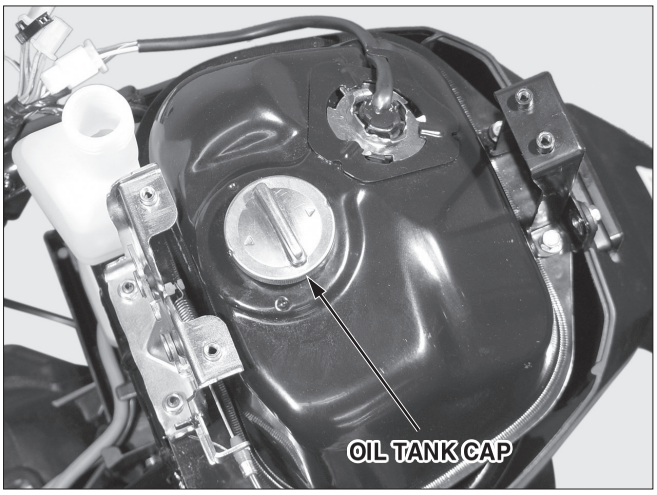

FUEL LINE FOR CLOGGING

Check the fuel tank cap and/or fuel tank breather tube for clogging.
Visually inspect the fuel strainer for contamination.
Check the fuel flow with the fuel strainer installed and with the strainer removed.
Replace the fuel strainer if it is excessively contaminated or if the fuel flow is not smooth.

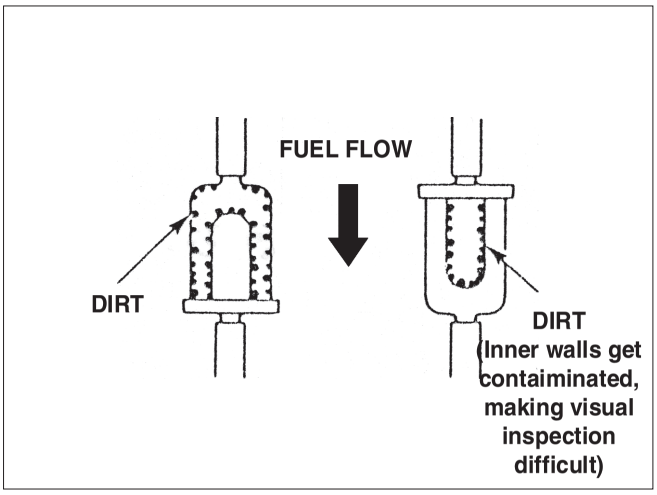

⚠ CAUTION

- Note the installation direction of the fuel strainer. Be sure to install it as shown in the drawing, i.e., with the cup facing down. Fuel flows even though the strainer is installed upside down, but it contaminates the inner wall of the strainer and prevents visual inspection of the strainer.

Remove the fuel valve lock nut and check the fuel strainer screen for contamination. Tighten the lock nut to the specified torque.

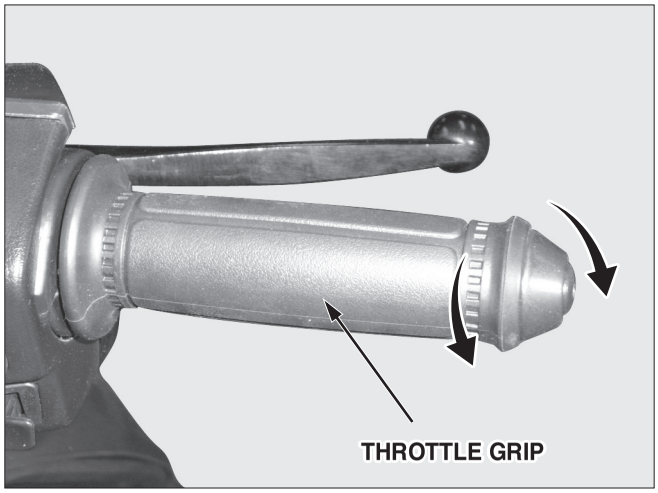

THROTTLE GRIP OPERATION

Check if the throttle grip operates smoothly in any steering position
If the throttle grip does not operate properly, lubricate the throttle cable.
If the throttle grip does not operate properly, check the throttle cable for aging, damage or kinking.
Check the throttle grip free play.

FREE PLAY : 2~6mm

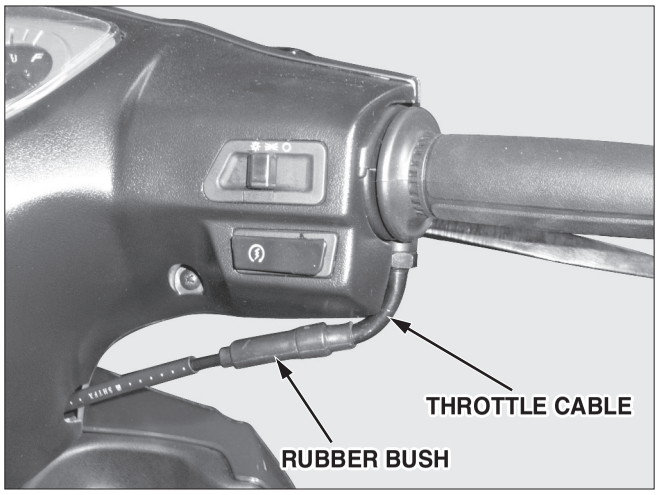

If the throttle grip doesn't move smoothly, adjust the free play.
Take off the rubber boots, loosen the lock nut, and turn the adjuster to control the free play.
After adjusting, tighten the lock nut, check the operation of grip, and then put on the rubber boots.

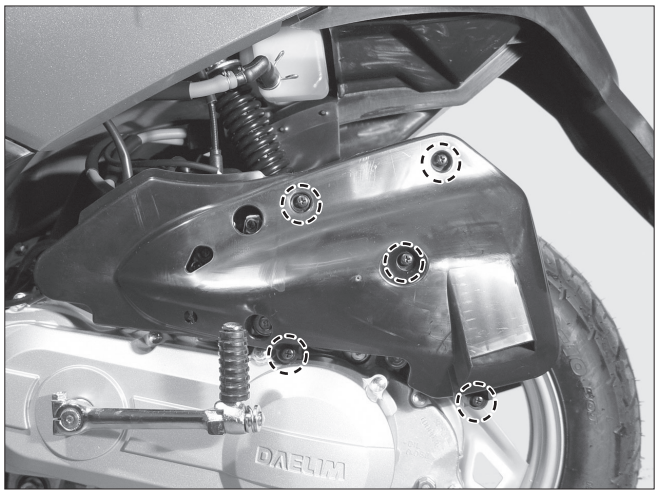

AIR CLEANER

Loosen the 5 setting screw assembled to the air cleaner case cover, and then remove the air cleaner case cover.

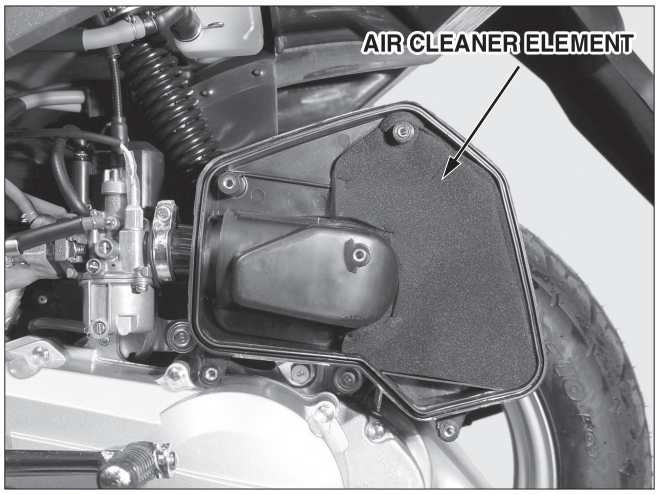

Remove the air cleaner element.
Wash away any accumulated dust or dirt, by gently squeezing it in non flammable or high flash point solvent.

⚠ WARNING

- Using gasoline or low flash point solvents for cleaning parts may result in a fire or explosion.

⚠ CAUTION

- Cleaning the element with gasoline or any acid, alkaline, or organic, volatile type oil may cause improper ignition, deterioration of the element, or a loosening of the element adhesive.

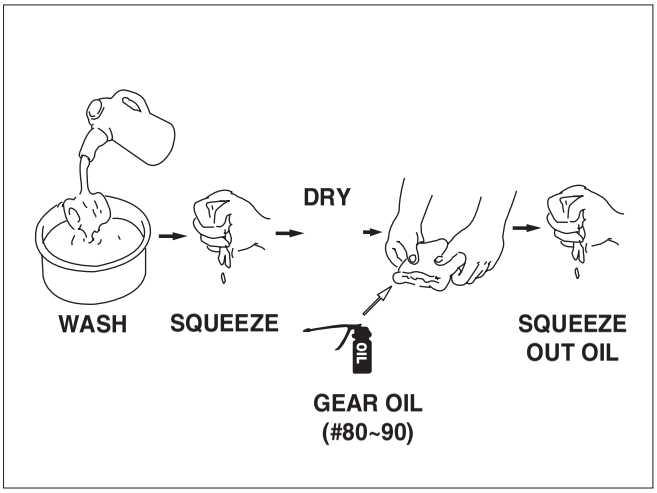

Be sure to allow the element to dry thoroughly before applying oil. Otherwise, the oil will be diluted by the and the filtering ability of the filter will be much less effective.
Spread clean #80~90 gear oil on the element, rubbing inthoroughly over the surface with both hands, and then squeeze out any excess oil.

⚠ CAUTION

- Using air filter oil when riding in extremely dusty conditions prevents premature engine wear due to dust/dirt drawn into the engine. Apply air filter oil to the entire surface of the element and rub it with both hands to saturate the element with oil. Squeeze out excess oil.

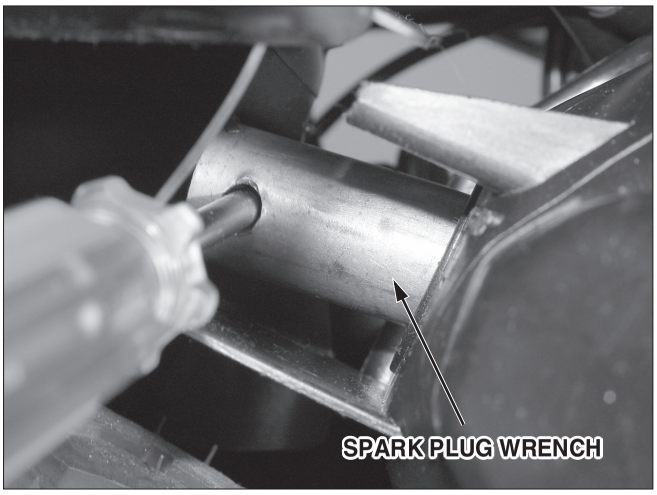

SPARK PLUG

Remove the plug maintenance cover.
Remove the spark plug cap and disassemble the plug.

Check the plug for damage, contamination or deposits. If the spark plugs are severely contaminated or damaged, raplace with new ones. If the plugs can be reused after removing only the carbon, use plug cleaner and wire brush to clean the plugs.
Always use a feeler gauge to check the gap.

SPARK PLUG GAP : 0.6~0.7mm

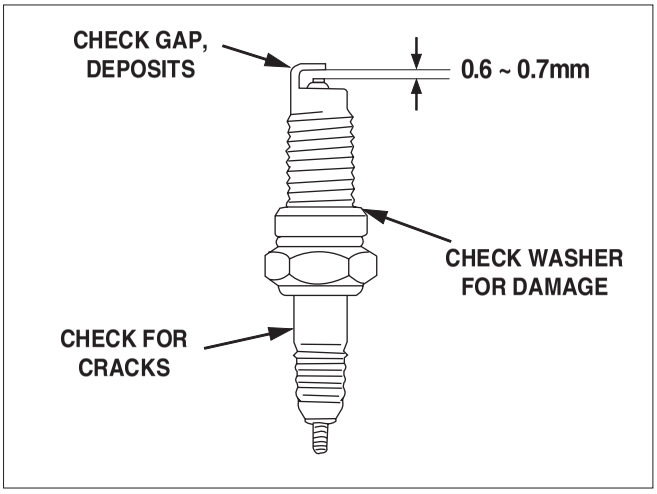

⚠ CAUTION

- Make sure there is no dirt or debris on the seat of the spark plug hole before inserting the spark plug.
- To prevent damage to the cylinder head, hand-tighten the spark plug before using a wrench to tighten to the specified torque.(torque : 14kgf · m)
- Do not overtighten the spark plug.

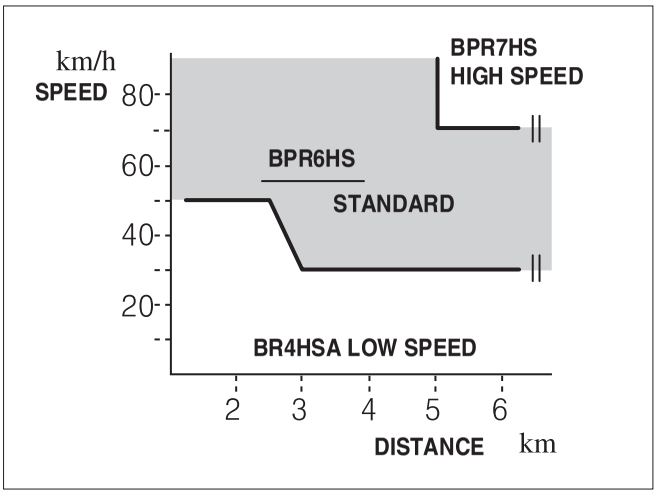

Spark plug specification change

HIGH SPEED	STANDARD	LOW SPEED
BPR7HS	BPR6HS	BR4HSA

- The specification changes according to the speed.

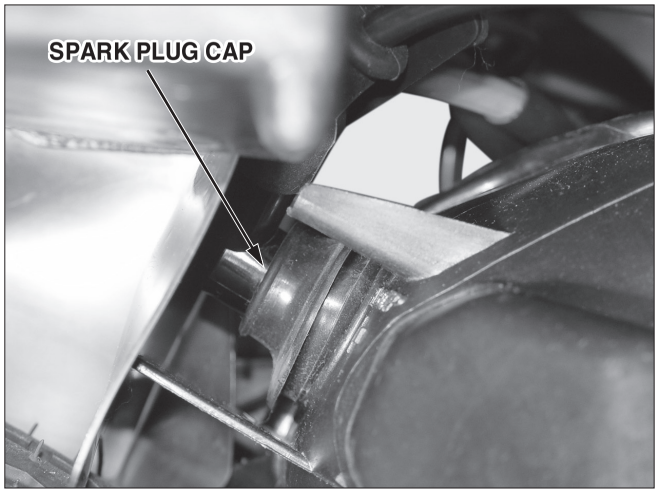

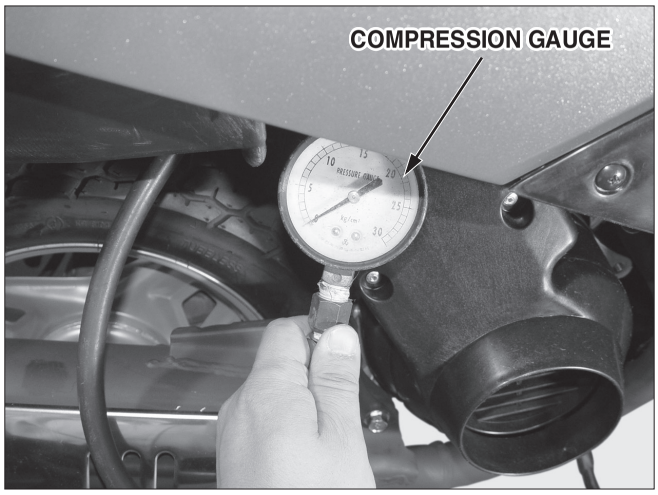

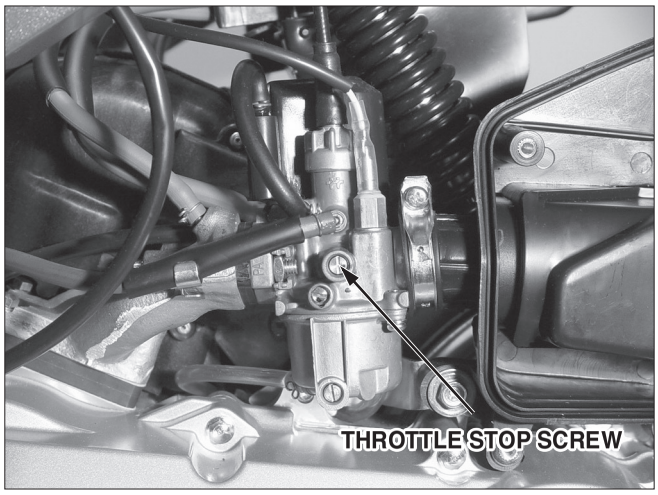

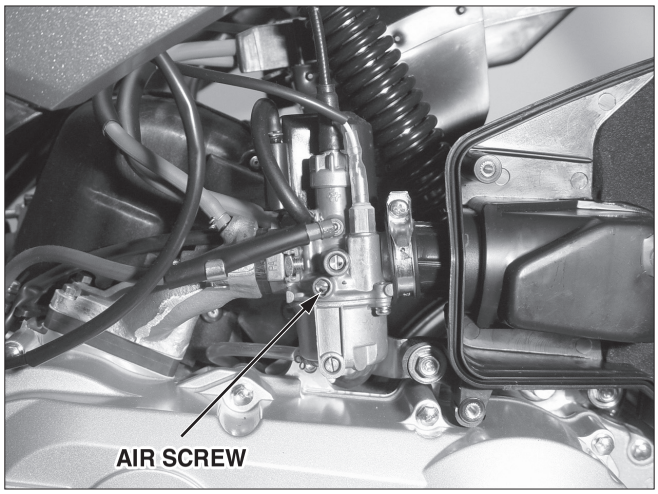

CYLINDER COMPRESSION PRESSURE

Start and warm up the engine.
Remove the plug maintenance cover.
Stop engine, and remove the spark plug cap and spark plug.
Install a compression gauge.
Open the throttle completely, and crank the engine with the starter motor until the gauge reading rising.

⚠ CAUTION

- Fix the vehicle securely.
- Cut off the engine, and lock the high pressure cable.
- While the engine is hot, pay attention not to get burned.

⚠ NOTE

- The maximum reading is usually reached within 4~7 seconds

COMPRESSION PRESSURE : 10.0kg/cm² (600rpm)

If the pressure is low, check the following:
-Leakage from the cylinder head gasket
-Piston/cylinder worn
If pressure is high, check the following:
-Carbon deposits on the piston head, and cylinder head.

TOOL : COMPRESSION GAUGE

CARBURETOR IDLING

Stand the vehicle on the main stand.
Heat the engine to make accurate idling inspection and adjustment.
Verify all engine adjustments satisfy specifications. Make adjustments, if necessary.
Turn the throttle stop screw and make adjustments to prescribed idling speed.

STANDARD RPM: 2,000rpm

AIR SCREW ADJUSTMENT

⚠ NOTE

- The air screw is factory pre-set. Adjustment is not necessary unless the carburetor is overhauled or a new air screw is installed.
- Tightening the air screw against its seat will damage the seat.

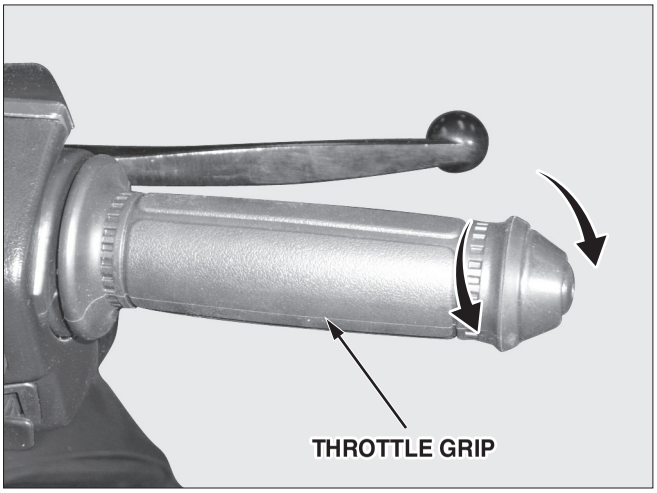

Turn the air screw clockwise until it seats lightly then back it out to the specification given. This is an initial setting prior to the final air screw adjustment.
Rev the engine up slightly from the idle speed and make sure that engine speed rises and returns smoothly.
Adjust by turning the air screw in or out within a 1/4 turn if necessary. If the engine cannot be adjusted by turning the air screw within a 1/4 turn, check for other engine problems.

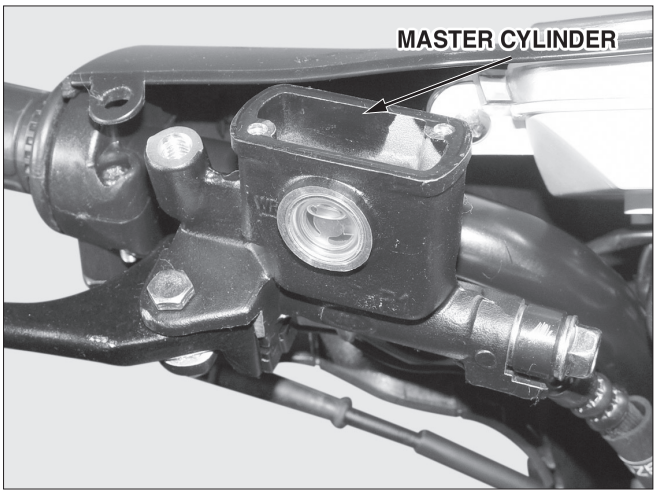

BRAKE FLUID

Remove the brake fluid cover.
Check the oil level inside the front brake reservoir. If the oil level is near the lower limit line, remove the reservoir diaphragm and fill DOT 3 and DOT 4 brake fluid to the top limit line.
If the brake fluid reaches the lower limit line, check the entire brake system for leaks.

⚠ CAUTION

- Brake fluid will damage painted, plastic or rubber parts.
- Mixing incompatible fluids can impair braking efficiency.
- Foreign materials can clog the system, causing a reduction or complete loss of braking ability.
- A leak in the brake system can lead to reduced braking effiency and possible loss of braking ability.

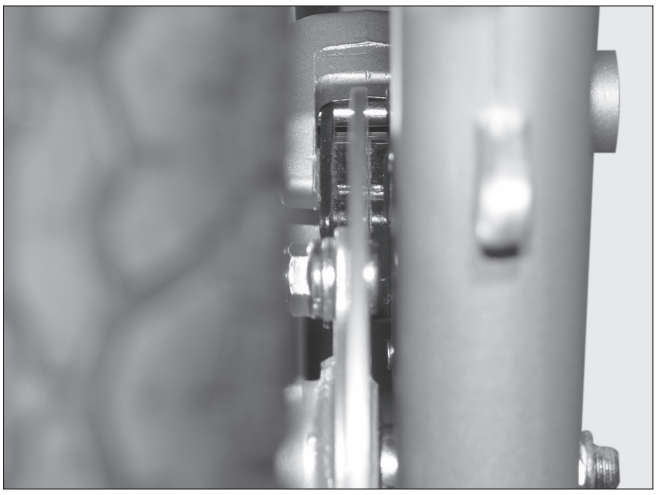

BRAKE PAD/SHOE

BRAKE PAD REPLACEMENT

Check the brake pads for wear.
If the red mark on the pad reaches the brake disc, replace the pads.

⚠ NOTE

- Replace the brake pads in sets.

BRAKE SHOE REPLACEMENT

If the arrow mark of the wear limit aligns with the ‘ ’ mark when the rear brake lever is fully pressed, it indicates the brake lining has reached the service limit. Replace the brake shoes.

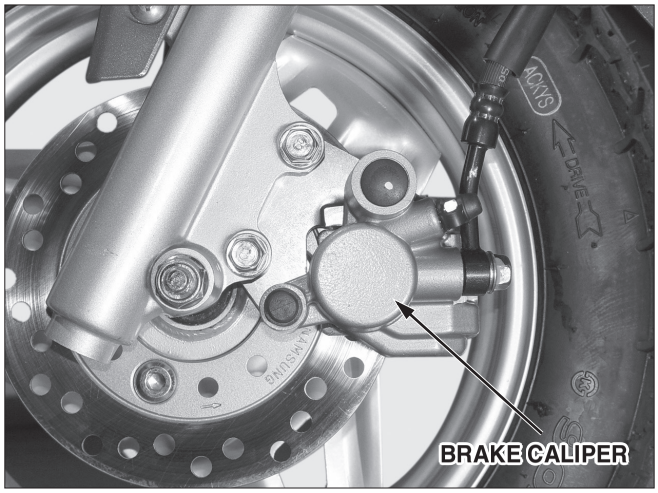

BRAKE SYSTEM

Check the front brake hose for cracks or damage. If any leaks are found, replace immediately.
Check the brake rod for looseness or damage, and replace it if necessary.

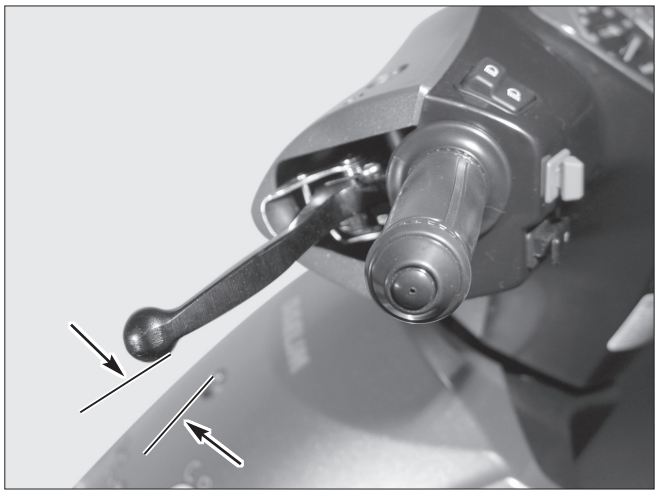

BRAKE LEVER FREE PLAY

Check the free play after pulling the lever.

FRONT : 10~20mm
REAR : 10~20mm

REAR BRAKE FREE PLAY ADJUSTMENT

Turn the adjuster nut to adjust the free play.
After initial adjustment, check the operation of the rear brake light switch. Make additional adjustments, if necessary.

HEADLIGHT ADJUSTMENT

Adjust the headlight beam level by operating the adjusting screw located on the upper side of the front fender.

⚠ NOTE

- Adjust the beam level according to local laws and regulations.
- Improper beam level adjustment may blind oncoming drivers, or may incorrectly light the road ahead.

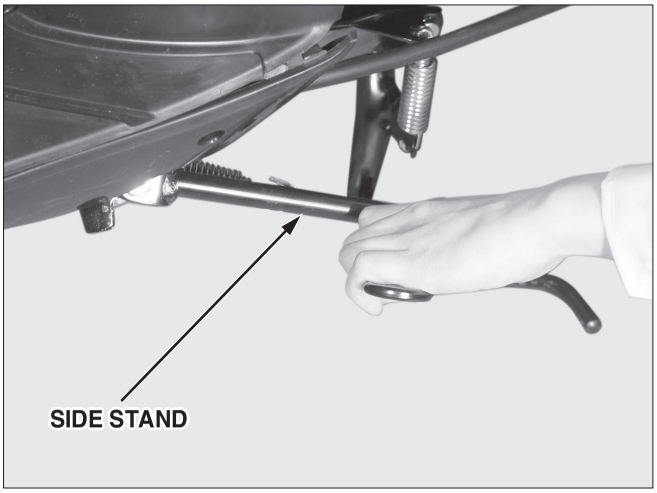

SIDE STAND

Erect the main stand.
Pull the lower end of the side stand, and see if it moves freely.
If the side stand does not move smoothly, apply grease to the pivot area.
If the side stand moves too freely, check the side stand spring.
Check the axial movement of the side stand.

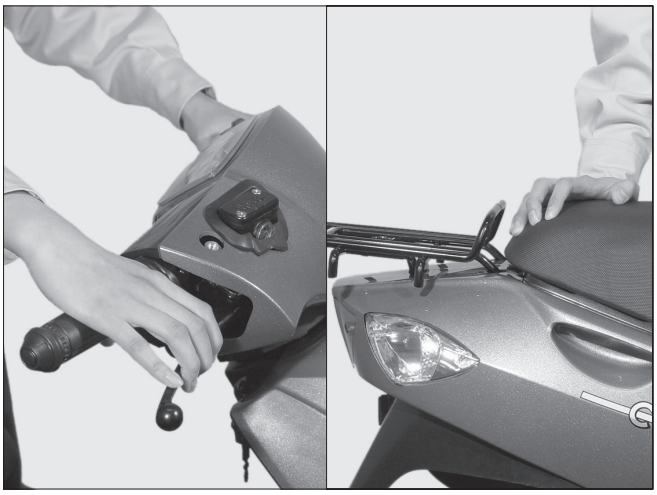

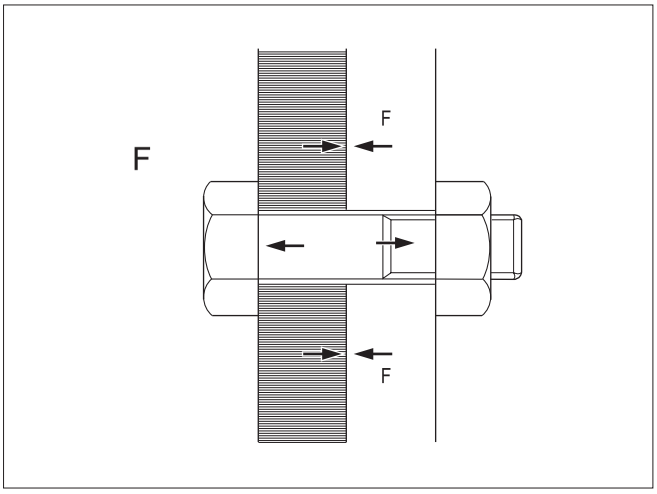

SUSPENSION

⚠ NOTE

- Do not ride motor cycle with an unsatisfactory suspension. Loose or worn suspension parts will lead to deterioration in the vehicle's safety and operation efficiency.

FRONT WHEEL

Hold the brake lever, and compress the front cushion up and down several times to check the operating conditions.
Check the front fork for oil leakage, parts damage or looseness.

REAR WHEEL

Compress the near cushion up and down several times to check the operating conditions.
Check the rear fork for oil leakage, parts damage or looseness.

BOLTS, NUTS, FASTENERS

Check all nuts and bolts of the frame during the regular maintenance to check if they meet the prescribed torque value.
Check all pins, clips, hose clamps and cable stays.

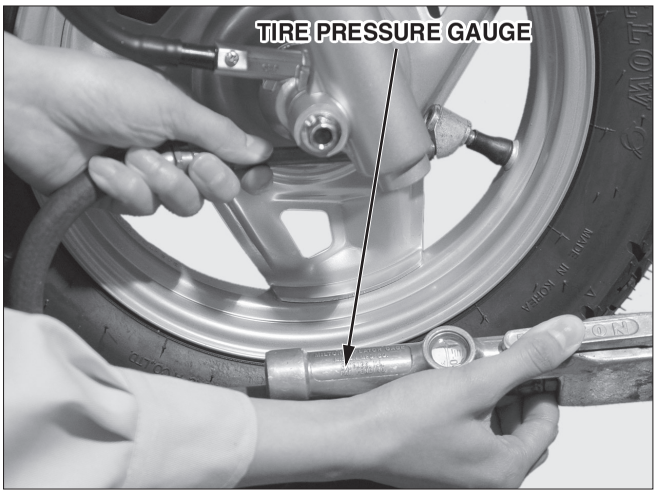

WHEELS/TIRES

⚠ NOTE

- Check the tire pressure when the tires have been cooled off. Check the tread (the part making contact with the road surface) and side for wear, cracks or damage. Replace damaged tires.

STANDARD PRESSURE

kgf/ cm²

ITEM	FRONT WHEEL	REAR WHEEL
DRIVER ONLY	1.25	2.00
DRIVER AND A PASSENGER	1.25	2.00

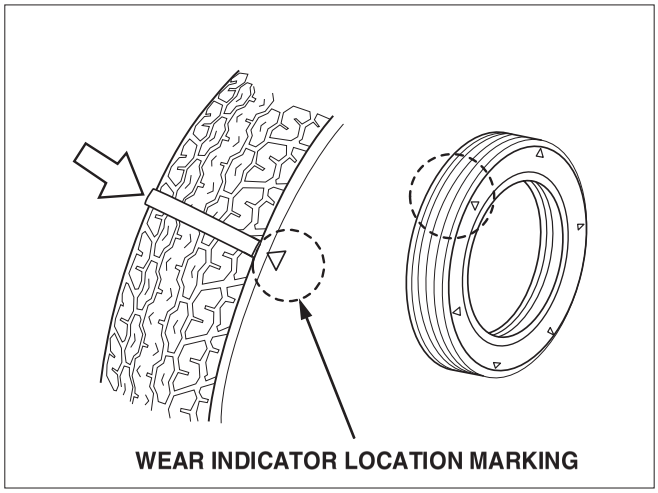

Check the tread depth at the tire center.
If the tread depth has reached the service limit, replace the tire.

STEERING HEAD BEARING

⚠ NOTE

- Check the cable if it interferes with the handle operation.

Lift the front wheel and check if the handle moves right and left smoothly. If the handles move heavily, check if the cable or electric cord interferes with the handle. If the hadle moves satisfactorily, adjust the steering head bearing.

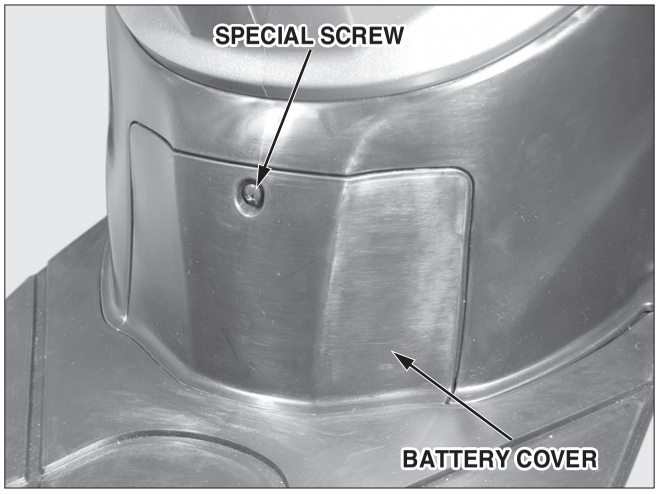

BATTERY

Remove a special screw securing the battery cover from the floor panel.
Check if the terminal is loose.
If the terminal is loose, check and clean the contacting surface and then tighten it.
Apply grease thinly after tightening.
If the terminal is rusted, remove the battery, pour warm water and clean with the wire brush.

- FULL CHARGING VOLTAGE : 13.0~13.2V
- LOW CHARGING VOLTAGE : LESS THAN 12.3V

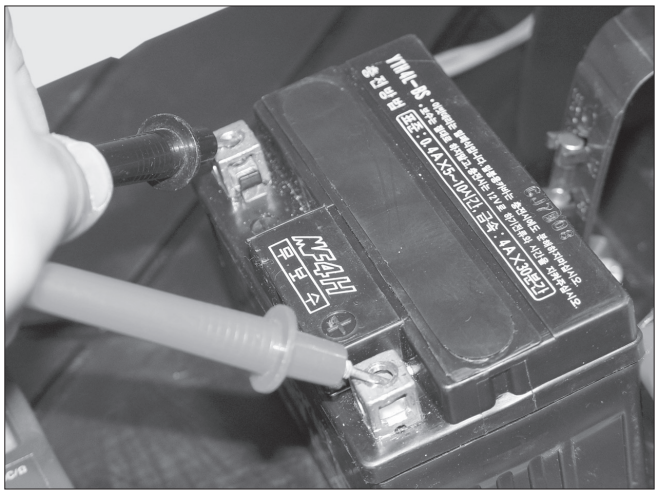

⚠ NOTE

- Check the charging condition using the voltmeter.
- Pay attention not to transform the battery terminal.
- Never remove the filler cap.

3. EXTERNAL PARTS

SERVICE INFORMATION · · · 3-1
MAINTENANCE PRECEDURE · · 3-2
LUGGAGE BOX · · · · · · · · 3-3
BATTERY MAINTENCE LID · · 3-3
CENTER COVER · · · · · · · 3-3
REAR CARRIER · · · · · · · · 3-3
BODY COVER · · · · · · · · · 3-3
REAR FENDER · · · · · · · · 3-3
FLOOR SIDE COVER · · · · · 3-4
FLOOR PANEL · · · · · · · · 3-4
FRONT COVER · · · · · · · · 3-5
FRONT FENDER · · · · · · · 3-5
INNER COVER · · · · · · · · 3-5
FRONT UNDER COVER · · · 3-6
FRONT HANDLE COVER · · · 3-6
REAR HANDLE COVER · · · 3-6
MUFFLER SEPARATION · · · ·3-7

SERVICE INFORMATION

⚠ NOTE

This section describes external parts removal/installation.
Do not apply unreasonable force when disassembling covers, to prevent possible damage.
A muffler is hot. Do not service it immediately after the engine is stopped.

MAINTENANCE PROCEDURE

NAMES OF FRAME COVERS

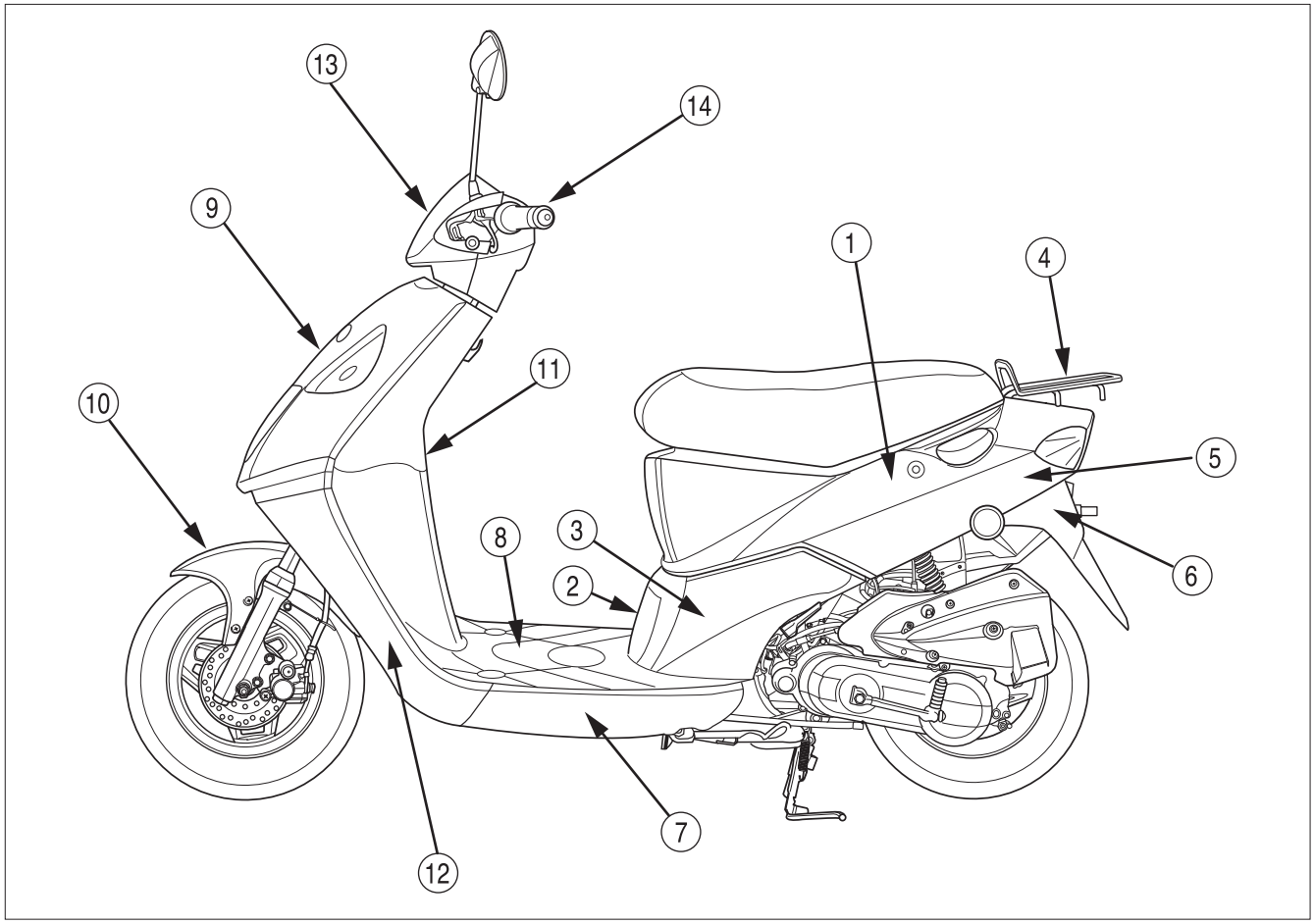

This chart shows arrows connected in the order of disassembling covers.

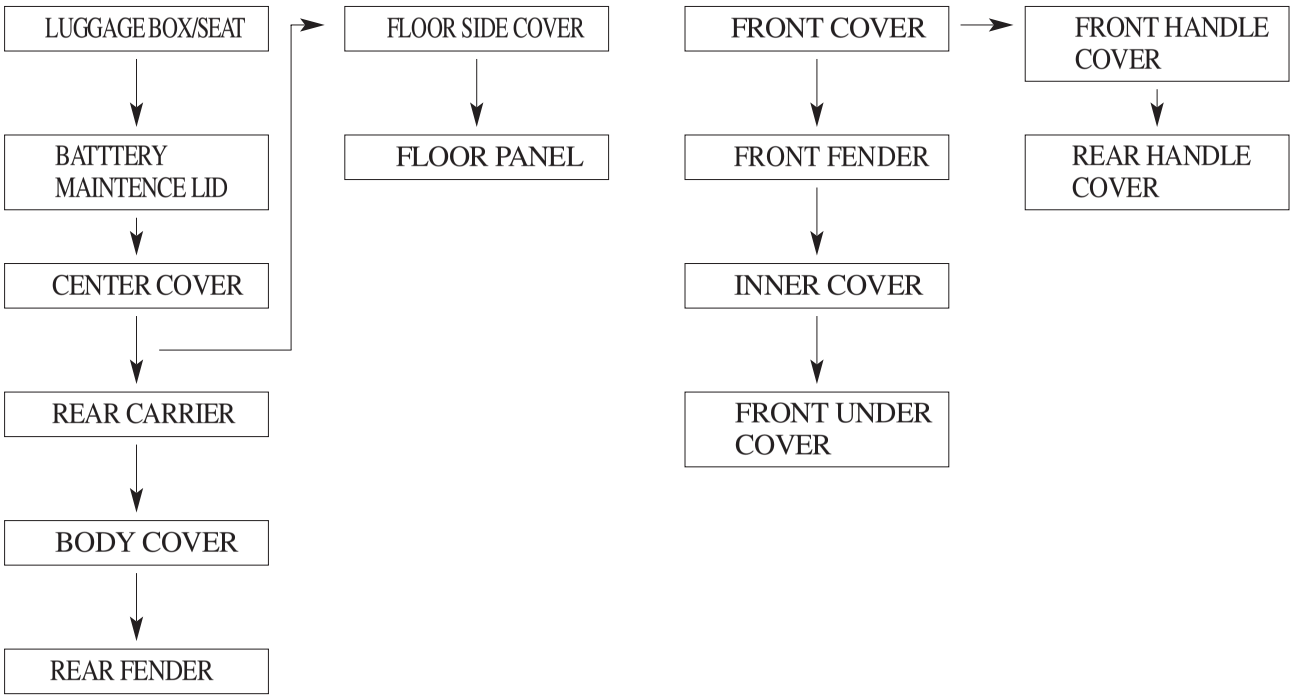

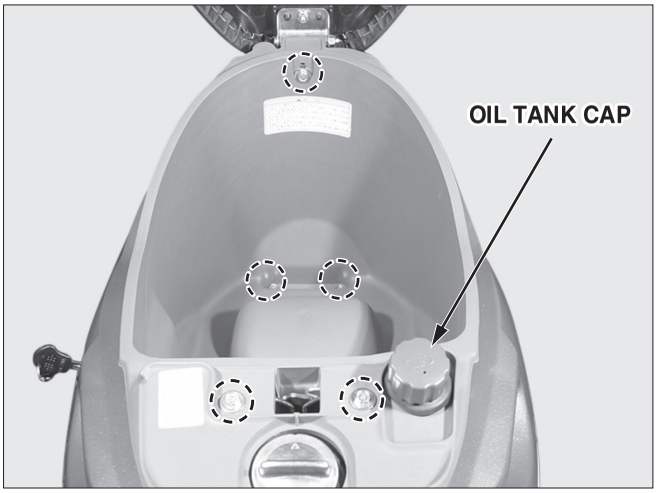

LUGGAGE BOX

Loosen 3 washer bolts and 2 flange bolts.
Remove the oil tank cap and the fuel tank cap.

⚠ NOTE

- Luggage box can be removed with the seat.

Remove the luggage box.
Install in the reverse order of removal.

⚠ CAUTION

- Install the oil tank cap and the fuel tank cap temporarily to prevent the foreign material from entering after removing the luggage box.

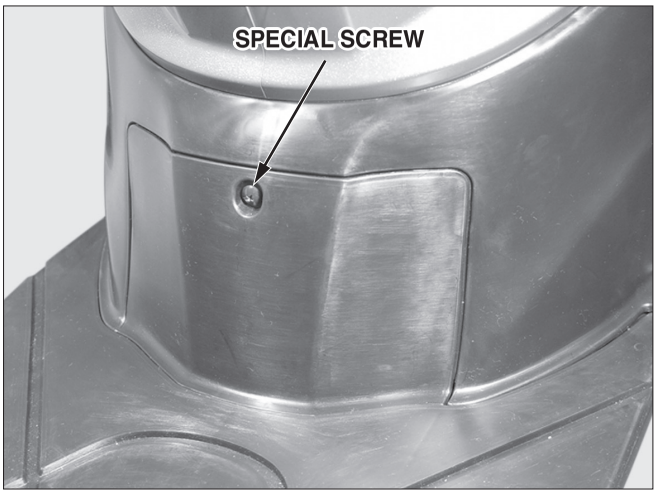

BATTERY MAINTENCE LID

Loosen 1 special screw and remove maintence cover.

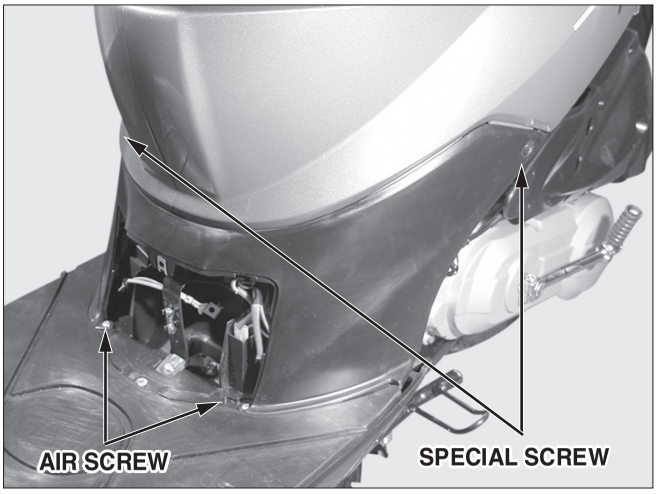

CENTER COVER

Loosen 2 tapping screw securing the floor panel.
Loosen 2 special screw (R/L) securing the body cover.
Remove the center cover.

⚠ CAUTION

- If removal is difficult, recheck each connection and then try removing again.

Install in the reverse order of removal.

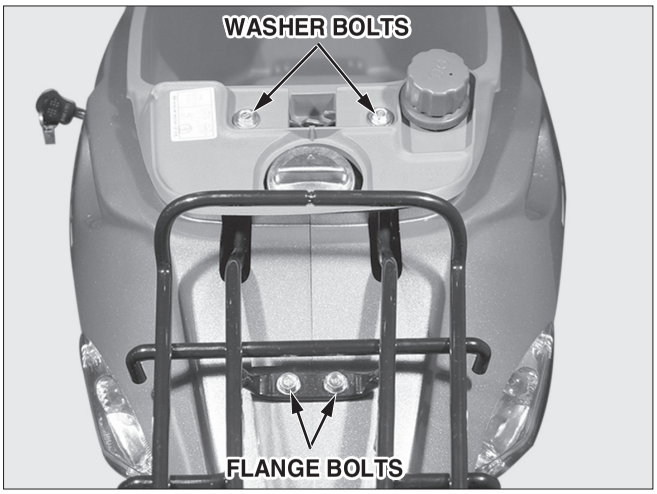

REAR CARRIER

Open the seat
Loosen 2 washer bolts securing luggage box and 2 Flange bolts securing body cover.
Remove the rear carrier.
Install in the reverse order of removal.

⚠ CAUTION

- Pay attention not to break of damage the rear carrier when installing or removing.

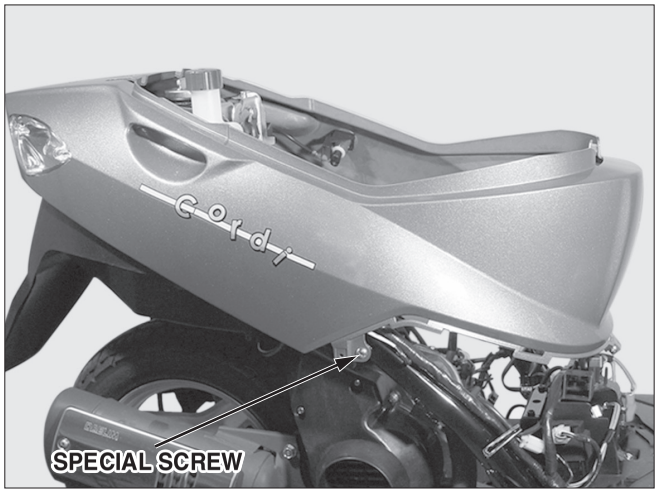

BODY COVER

Remove the luggage box. (⇨3-3)
Remove the center cover. (⇨3-3)
Remove the rear carrier. (⇨3-3)
Loosen 2 special screw (R/L) securing the frame body.
Loosen 2 special screw secuning rear fender.
Remove seat lock cable.
Remove tail light, coupler of winker.
Remove the body cover.
Install in the reverse order of removal.

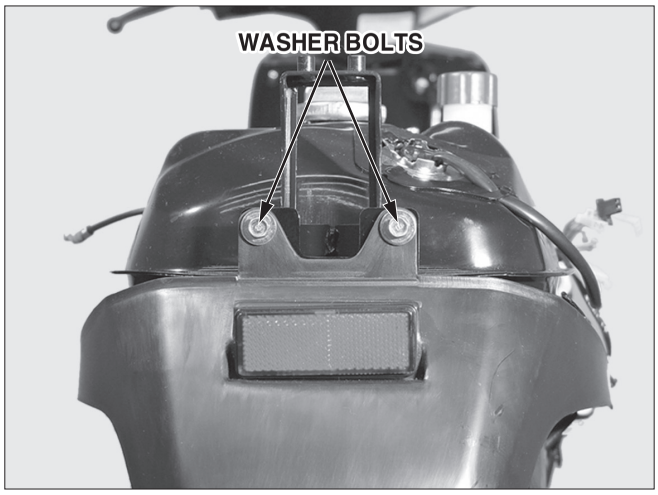

REAR FENDER

Luggage box. (⇨3-3)
Center cover. (⇨3-3)
Rear carrier. (⇨3-3)
Body cover. (⇨3-4)
Remove the 2 washer bolts securing frame body.
Draw the rear part of the rear fender from the bracket in the frame.
Loosen the rear cushion under bolt, remove the rear fender.

⚠ CAUTION

- If removal is difficult, recheck each connection and try removing again.

Install in the reverse order of removal.

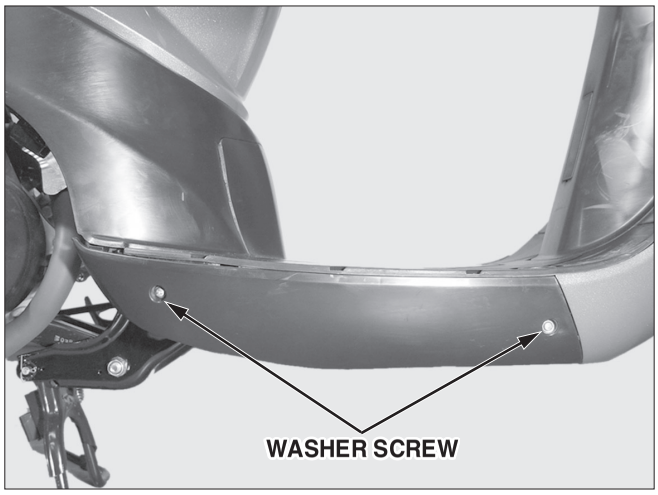

FLOOR SIDE COVER

Loosen the 2 washer screw located in the side of the R,L floor side cover.
Pull the front part of the floor side cover to remove the floor panel.
Remove the floor side cover.
Install in the reverse order of removal.

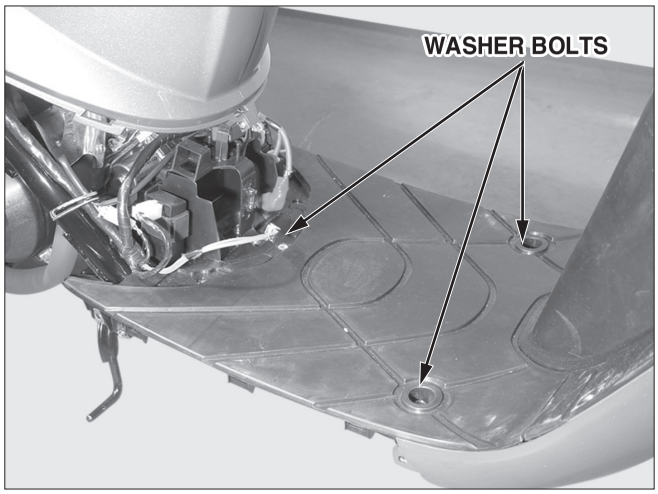

FLOOR PANEL

Remove the plug maintenance cover. (⇨3-3)
Remove the center cover. (⇨3-3)
Loosen the tapping screw securing the battery cover to remove the battery cover.
Disconnect the battery wire to remove the battery and loosen 1 washer bolt.
Remove the CDI, winker relay coupler, fuse.
Loosen the 2 washer bolts securing the floor panel.

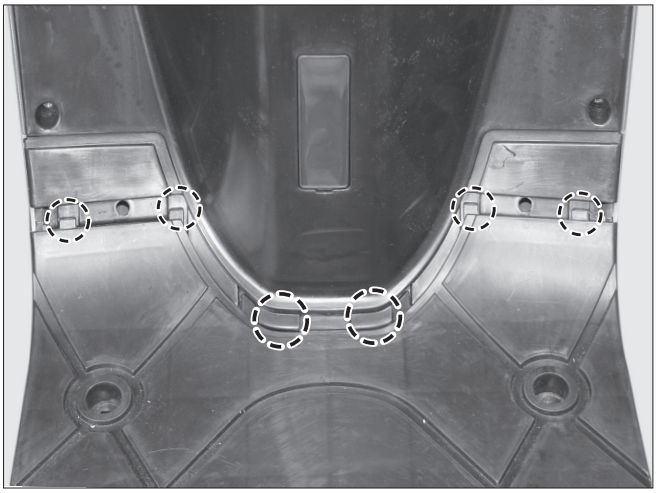

Remove the floor panel from the connecting groove of the inner box by lifting the rear part of the panel slightly.
Draw the floor panel moving it to the right and left to remove it.
Install in the reverse order of removal.

FRONT COVER

Loosen the upper cover set screws (R/L) securing the inner box.

Loosen the upper cover set screws (R/L) securing the front under cover.
Loosen the special bolt securing the front of the front cover.
Draw the upper part of the front cover to remove it.
Disconnect the head light wiring and remove the front cover.
Install in the reverse order of removal.

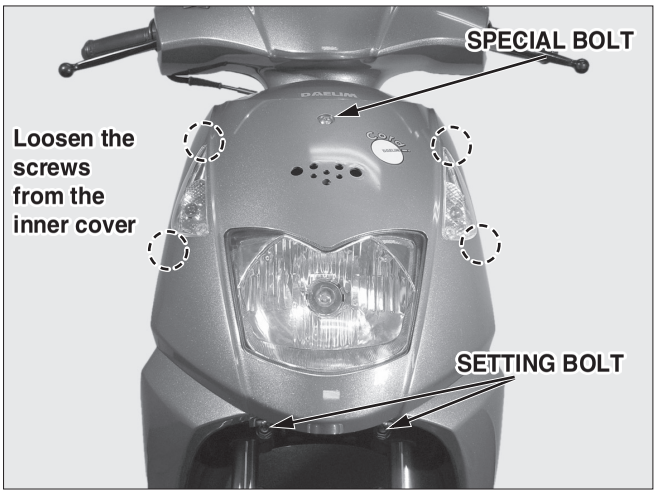

⚠ NOTE

- Check for proper alignment of the connection (hook) before performing installation.

FRONT FENDER

Loosen the special screw (R/L) securing the front fork.
Remove the front fender.
Install in the reverse order of removal.

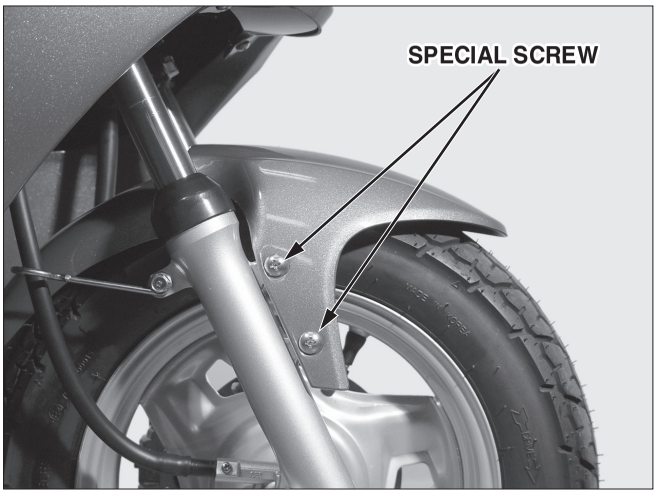

INNER COVER

Remove the center cover. (⇨3-3)
Remove the floor side cover. (⇨3-4)
Remove the floor panel. (⇨3-4)
Remove the front cover. (⇨3-5)
Loosen the tapping screws (R/L) securing the front under cover.
Loosen the 1 set screw securing bag holder.
Install in the reverse order of removal.

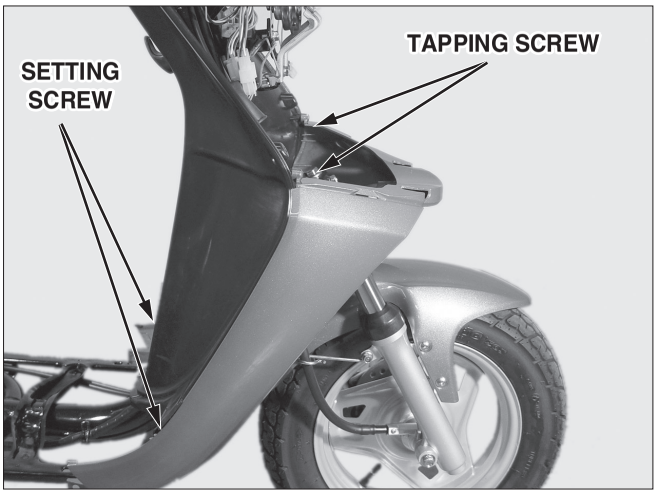

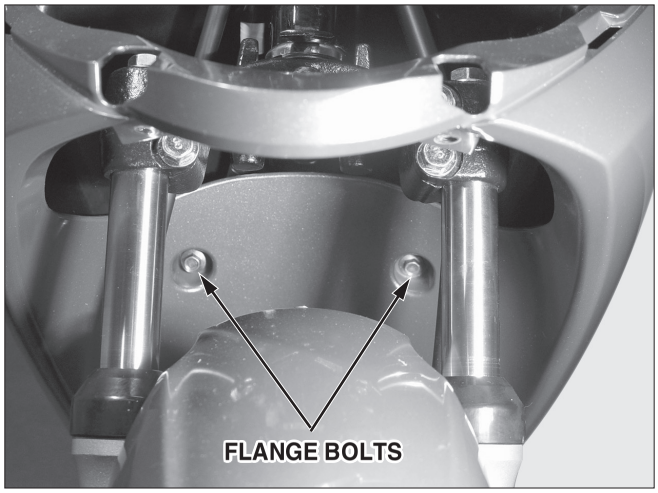

FRONT UNDER COVER

Remove the front cover. (⇨3-5)
Remove the inner box. (⇨3-5)
Remove the front fender. (⇨3-5)
Remove the front wheel. (⇨10-5)
Loosen the flange bolts securing the lower end of the inner cover.
Remove the front under cover.
Install in the reverse order of removal.

⚠ NOTE

- Pay attention not to turn over the vehicle.

FRONT HANDLE COVER

Remove the back mirror.
Remove the master cylinder seal.
Loosen the 2 tapping screws securing the rear handle cover.
Remove the front handle cover while pull the cover to the front slightly.
Install in the reverse order of removal.

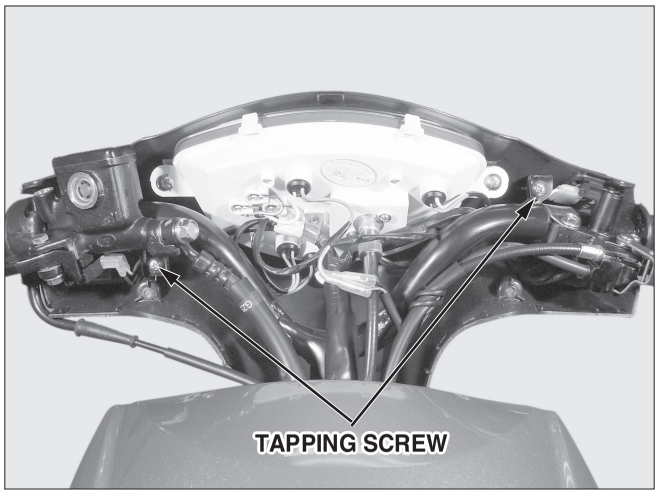

REAR HANDLE COVER

Remove the back mirror.
Remove the front handle cover. (⇨3-6)
Remove the speedometer cable from the meter.
Loosen the 2 tapping screws securing the steering handle comp.
Disconnect the right and left switch wiring.
Remove the speedometer and rear handle cover from the steering handle.
Disconnect the right and left switch.
Loosen the 3 tapping screws securing the speedometer and the rear handle cover.
Remove the rear handle cover.
Install in the reverse order of removal.

⚠ NOTE

- Check each switch for proper operation after installation.
- Wires and cables must be connected properly.

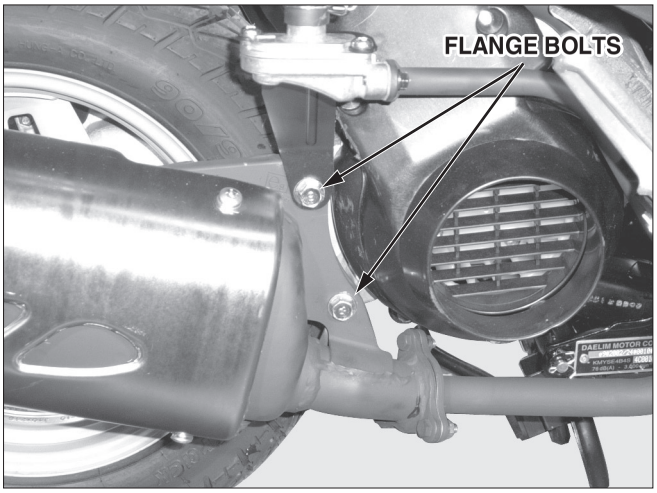

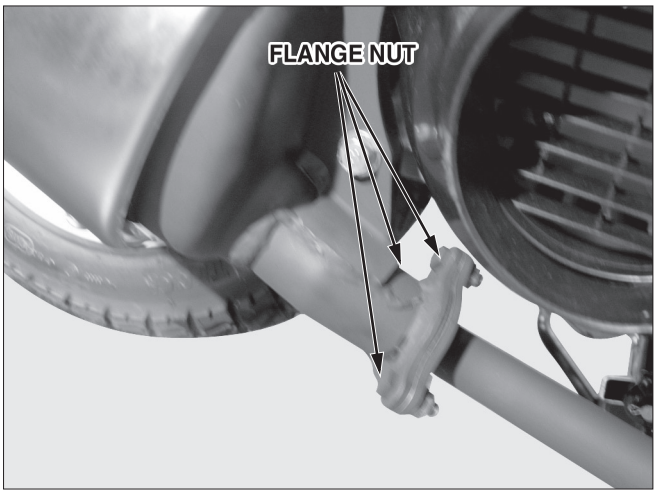

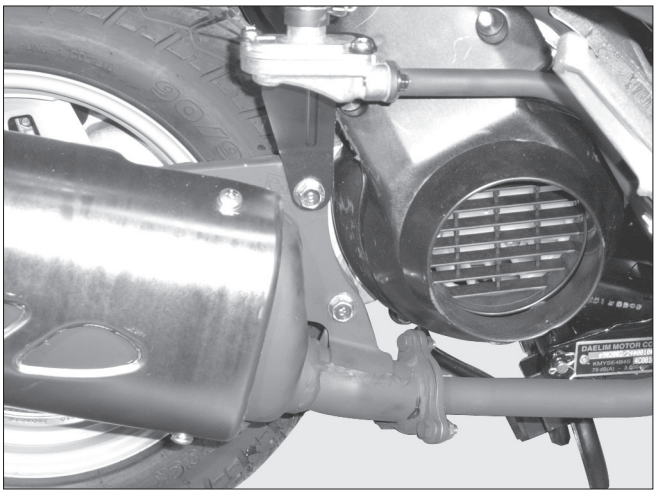

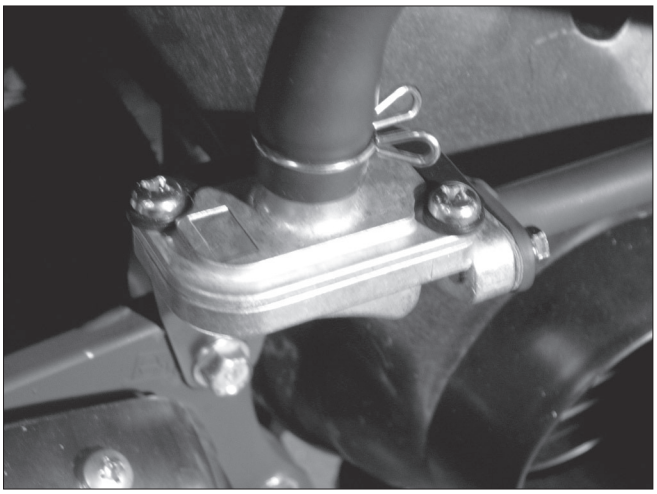

MUFFLER

EX. PIPE REMOVAL

Loosen the 2 flange bolts securing the SAI reed valve ass'y.
Loosen 1 flange nut and 1 special nut securing the cylinder comp.
Loosen 2 flange bolts securing the RH. crank case.
Remove the EX. pipe by drawing it to the ground.
Install in the reverse order of removal.

⚠ WARNING

- Never perform the maintenance of the muffler right after stopping the vehicle because the muffler is extremely hot

MUFFLER COMP

Loosen the 3 flange nuts securing the exhaust pipe comp.
Loosen 2 flange bolts securing the RH. crank case.
Install in the reverse order of removal.

TIGHTENING TORQUE OF THE RH. CRANKCASE : 3.3kgf · m

⚠ CAUTION

- When installing the gasket, replace it with the new one.
- Check to see if there is any evacuation after installing the muffler.

S.A.I PIPE

Remove 2 flange bolts securing the exhaust muffler ass'y.
Remove the upper flange bolt securing the muffler comp.
Remove the hose clip and tube.
Install in the reverse order of removal.

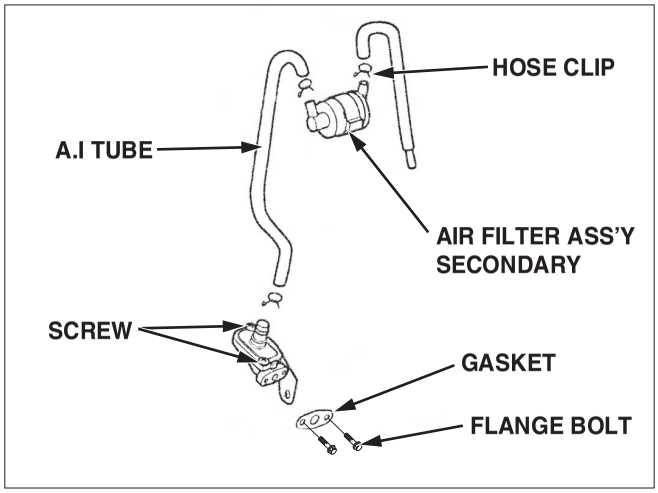

AIR FILTER ASS'Y SECONDARY

Remove the seat.
Remove the luggage box.
Remove the hose clip and the hose.
Install in the reverse order of removal.

MEMO

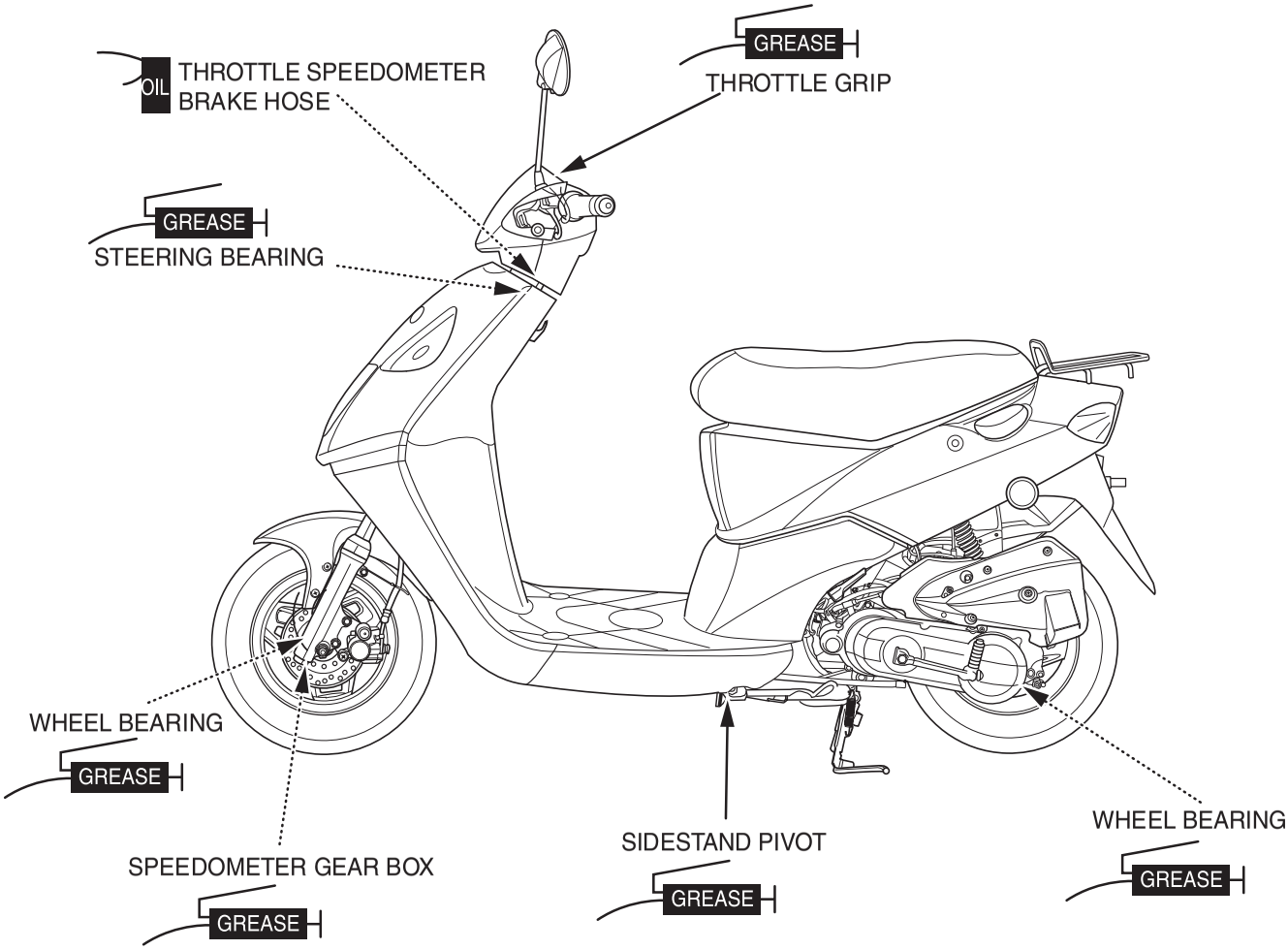
OIL
THROTTLE SPEEDOMETER
BRAKE HOSE
GREASE
THROTTLE GRIP
GREASE
STEERING BEARING
WHEEL BEARING
GREASE
SPEEDOMETER GEAR BOX
GREASE
SIDESTAND PIVOT
GREASE
WHEEL BEARING
GREASE

4. LUBRICATION SYSTEM

SERVICE INFORMATION 4-1
TROUBLESHOOTING 4-1
OIL SYSTEM DRAWING 4-2
OIL PUMP DISASSEMBLY/ ASSEMBLY 4-3
OIL PUMP INSPECTION 4-3
OIL PUMP ADJUSTMENT . . . 4-4
OIL PUMP BLEEDING 4-4
OIL PUMP, TUBE INSPECTION . . 4-5
OIL PASS, TUBE INSPECTION . . 4-5
ENGINE OIL LEVEL INSPECTION . 4-6
TRANSMISSION OIL INSPECTION . 4-7
OIL TANK DISASSEMBLY . . . 4-7

SERVICE INFORMATION

⚠ CAUTION

· Remove air from oil tube and oil pump if the oil tube is taken off or if air enters the oil tube.

If the oil tube is disassembled, remove the air in the oil pass tube.
Maintenanace on the oil pump is done without the engine being removed from the vehicle.
When disassembling the oil pump, do not allow foreign substances from entering the engine or oil pump.
Do not disassemble the oil pump assembly.
If the oil tube is disassembled, place a tube clip or band on the oil tube to prevent oil from leaking out.

TROUBLESHOOTING

Overheating or engine clogging

Faulty adjustment of oil pump(insufficient amount pumped).
Bad quality of engine oil.
Engine oil not being injected or blocked, bent strainer screen or oil tube.
Entering of air in oil tube system.
Faulty oil pump.
Engine oil not being supplied from oil tank.
-Blocked oil tank cap air hole
-Blocked oil strainer screen

Excess exhaust smoke, accumulation of carbon on spark plug

Faulty adjustment of oil pump(over-pumped amount).
Bad quality of engine oil.

OIL SYSTEM DRAWING

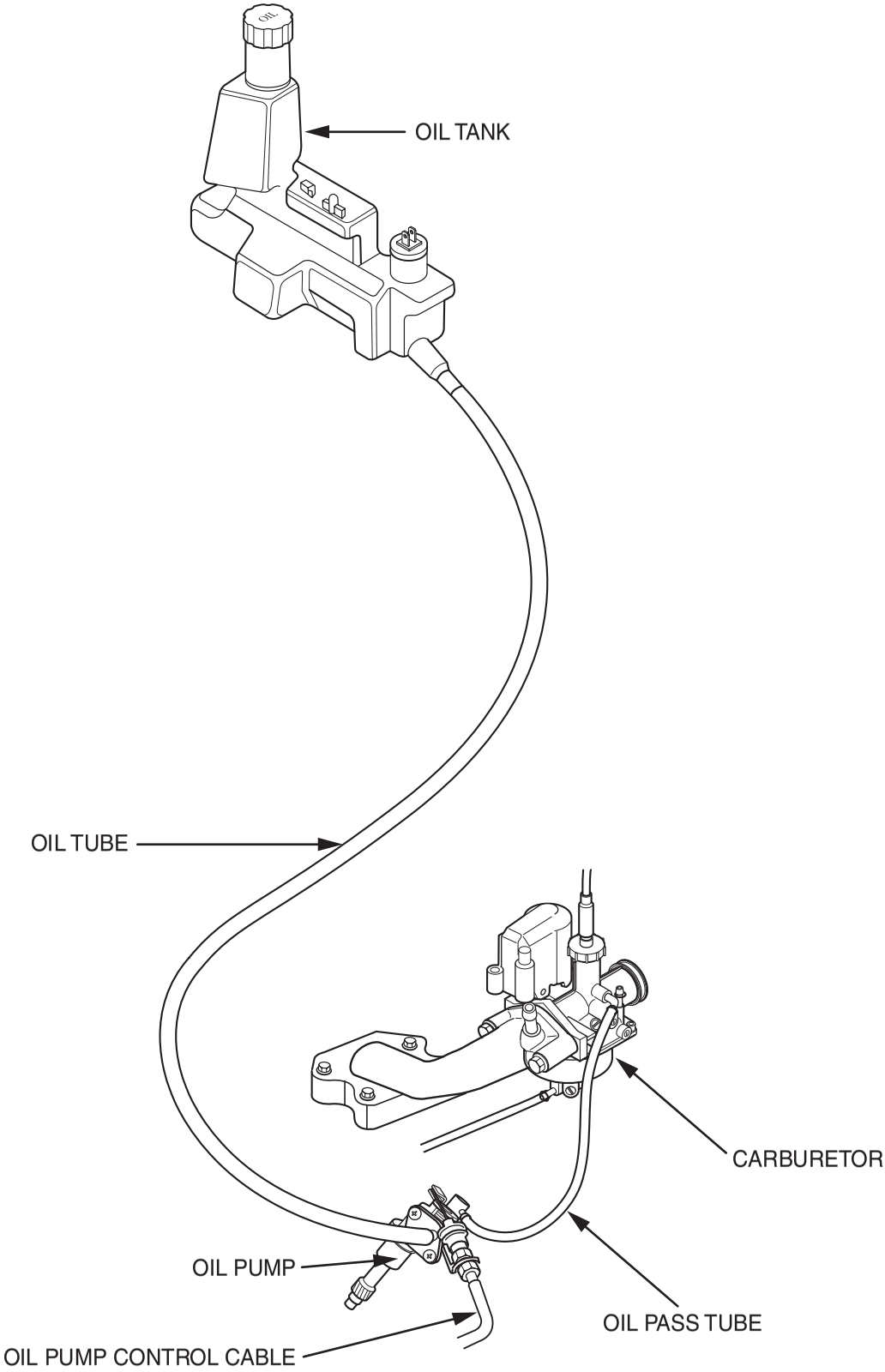

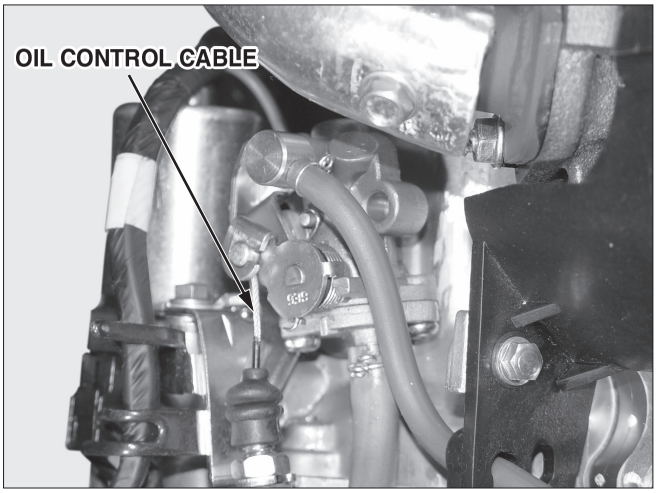

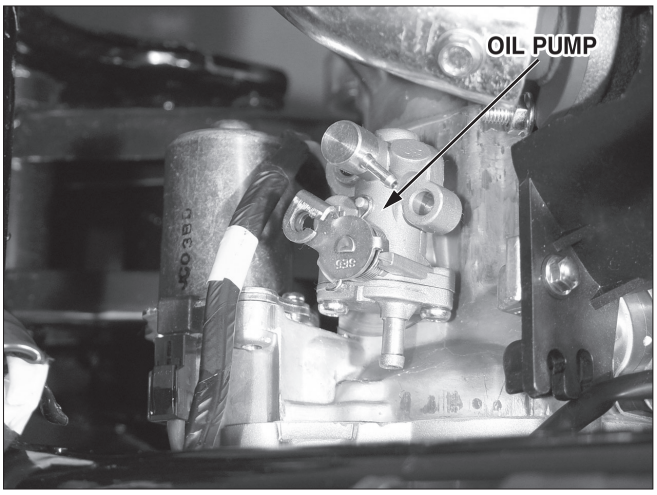

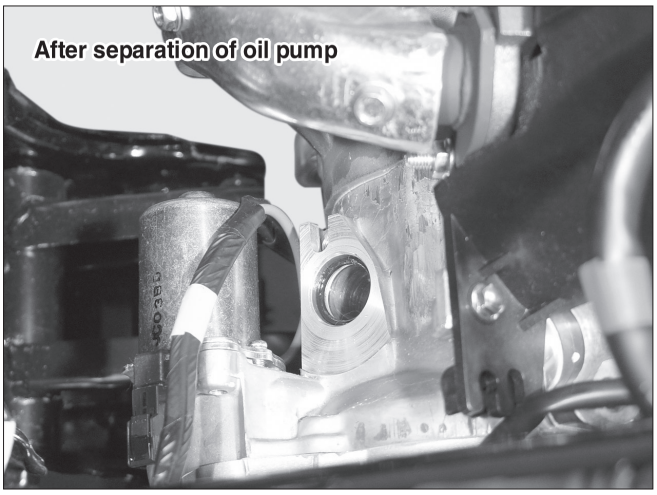

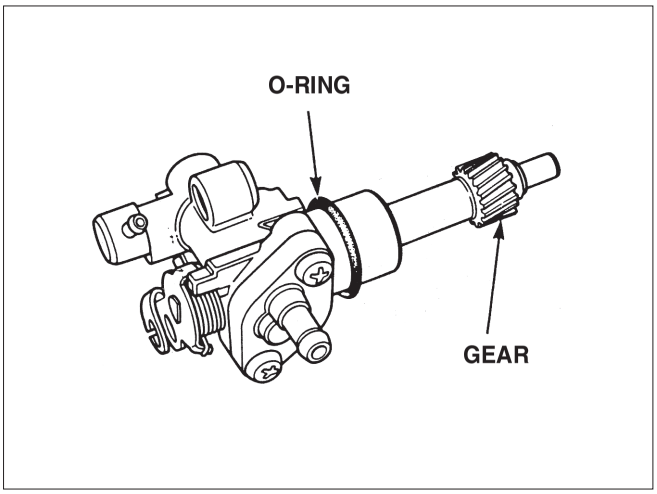

OIL PUMP DISASSEMBLY/ASSEMBLY

Remove the luggage box.
Remove the air cleaner.
Remove the 2 bolts of oil pump cable stay.
Remove oil tube on the side of oil pump.
Remove oil pass tube.
Remove setting plate of oil pump.
Remove oil pump.
Install in the reverse order of removal.

⚠ CAUTION

- When assembling/disassembling the oil pump, do not allow foreign substances from entering the engine and oil tube by cleaning around the oil pump.
- If the air enters into the oil line, it may cause faulty lubrication or engine sticking. Always remove the air in the oil line after maintenance.
- Pay attention not to damage the O-ring when assembling the oil pump.

OIL PUMP INSPECTION/ADJUSTMENT

Remove the oil pump.
Rotate the shaft and check for proper rotation.
Check the gear for wear, damage and leak of each seal.
If the oil comes out from the outlet of the oil pump after connecting the oil tube (which is connecting between the tank and the oil pump) to the inlet and rotating the shaft in the driving direction, consider the oil pump is in good condition.

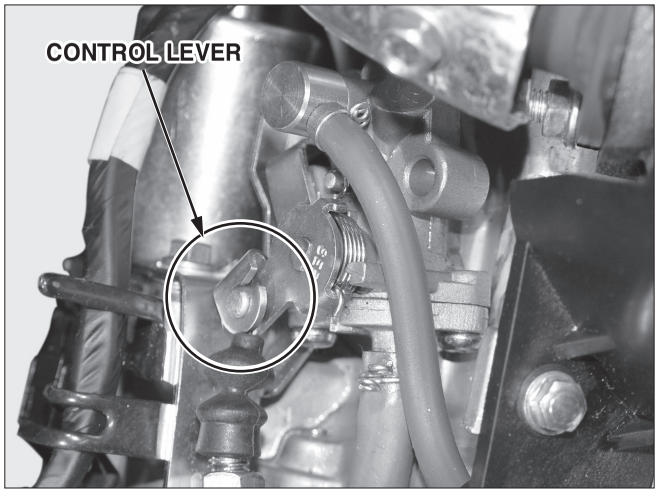

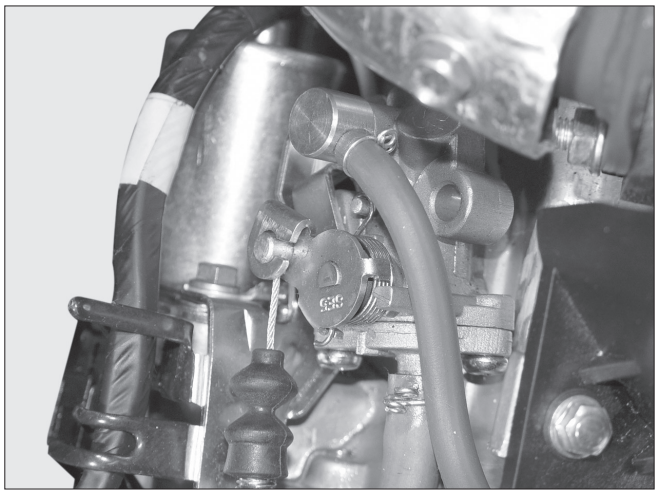

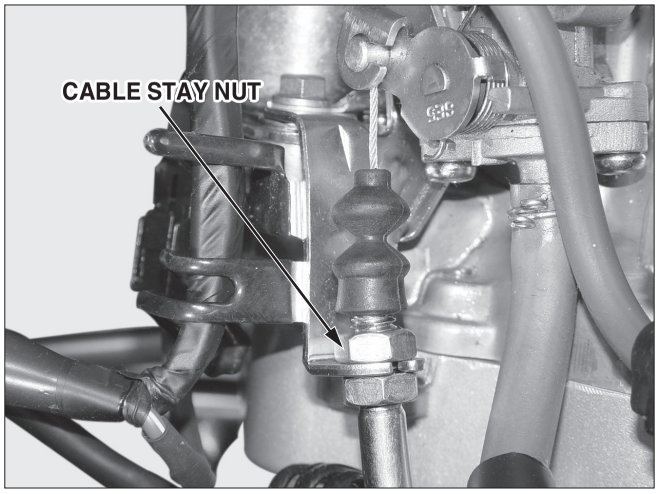

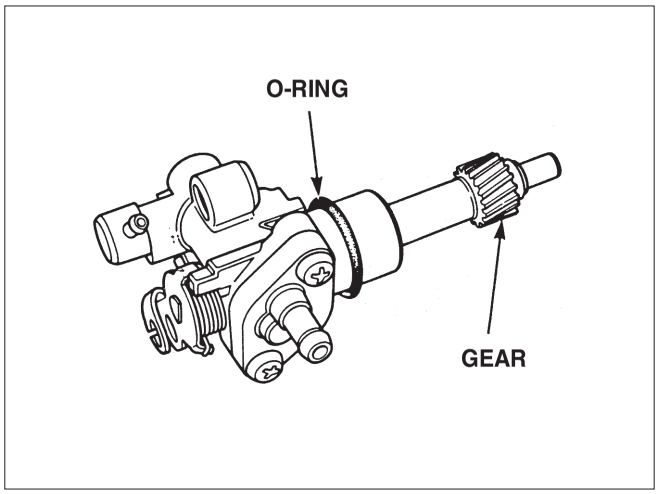

ADJUSTMENT

⚠ CAUTION

- Perform after inspection and adjustment of throttle cable.

Check to see if the matching mark of the oil pump body and control lever are aligned in a state where the throttle grip is completely rotated.

Adjustment is performed by loosening the oil pump control cable lock nut and turning the control nut.

While the engine is running, slightly open the throttle and check to see if the control lever operates together with the increase in engine rpms.

⚠ CAUTION

- Do not adjust the control lever matching mark to the closed side of the oil pump body matching mark. If this is done, the amount of pumped oil is reduced, negatively affecting the engine.
- Make sure that the open axis stays within an 1mm sphere.

The following occurs when the oil pump is adjusted incorrectly.
-When the oil pump lever is excessively opened :
Emitting of white exhaust gas or starting problems.
-When the oil pump lever is insufficiently opened :
Clogging of engine.

⚠ NOTE

- If the oil pump cable stay bolt is removed, apply the screw locking compound to the bolt thread.

OIL PUMP BLEEDING

⚠ CAUTION

- Air infiltration in the oil pass may cause the engine sticking. Always remove the air in the oil pass after maintenance.
- When disassembling the oil tube, air can be enter into the oil tube and the oil pump because of the oil leaking in the oil tube. Remove the air completely.
- Do not allow foreign substances from entering the oil pass.

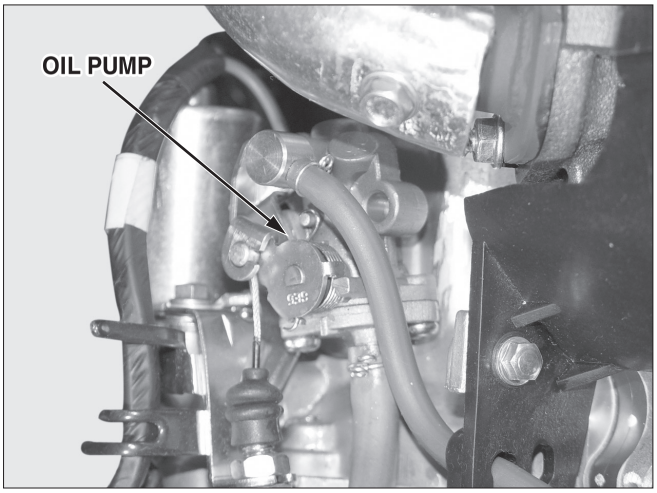

OIL PUMP/OIL TUBE

Fill the oil tank with engine oil.
Cap around the oil pump and the carburetor with dry cloth.
Locate the end of the oil tube in the level lower than the oil tank and drain the oil to bleed the air.
Install the oil tube in the oil pump.

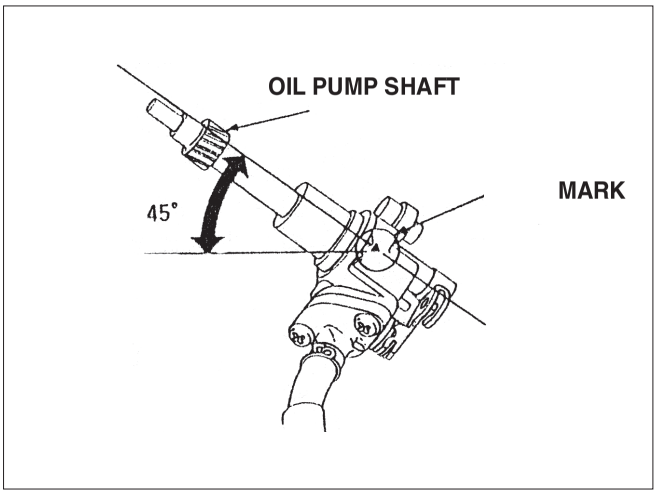

Incline the oil pump to locate the oil pump shaft at the angle of 45° from the “ ”mark with oil tube connected.

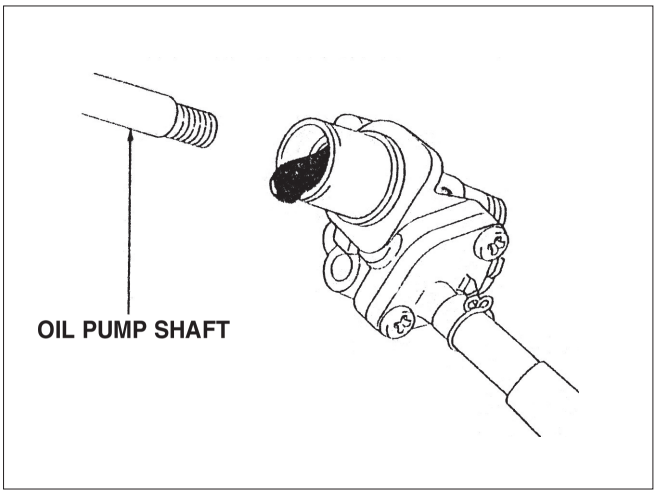

In this state, locate the oil pump in the level lower than the oil tank and drain the oil to bleed the air.
Install the oil pump shaft in the oil pump after completing the bleeding.
Install the oil pump in the crankcase.

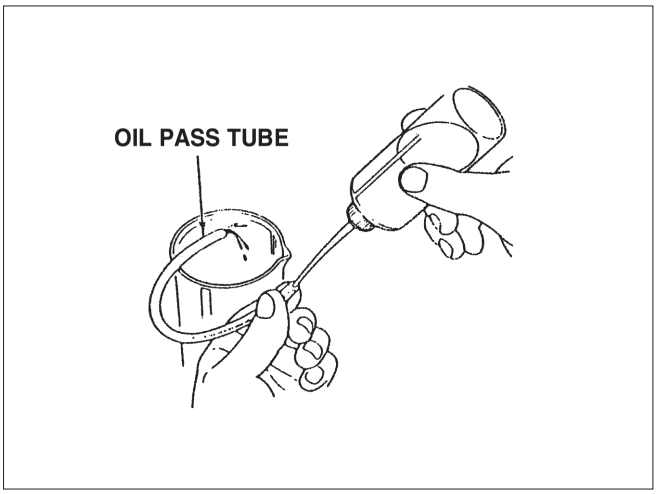

OIL PASS TUBE

Bend the oil pass tube in the “U” shape, keep the two ends parallel with each other and fill the oil pass tube with the oil.

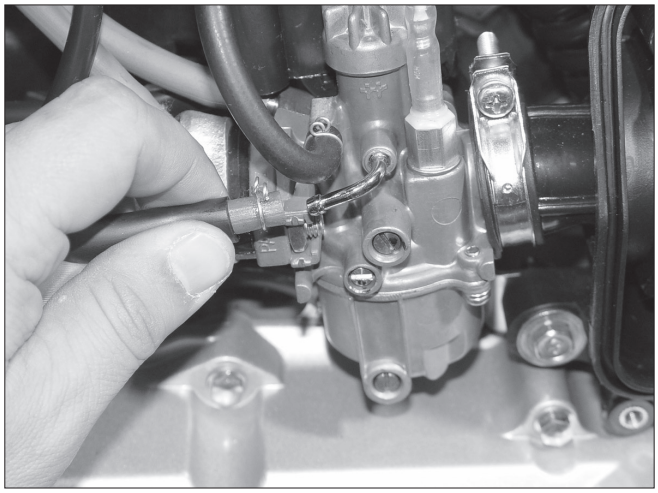

Connect the oil pump and then the carburetor quickly with the both ends of the tube pressed to avoid the air from entering.

⚠ NOTE

- Make sure that the tubes are arranged correctly.

Start the engine.

⚠ NOTE

- Do not start the engine in the poorly-ventilated area.

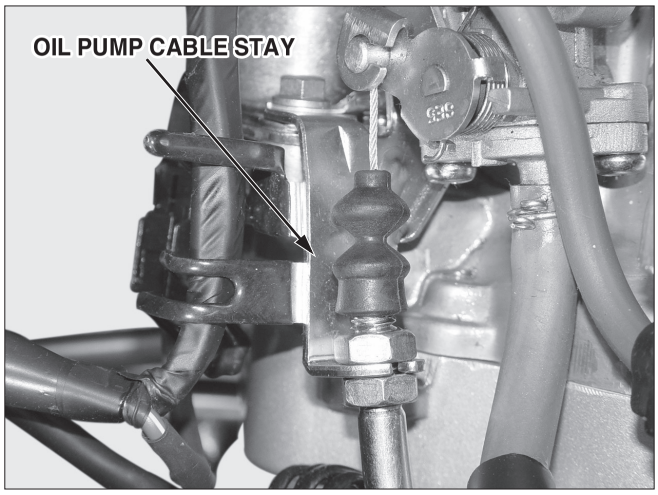

Open the oil pump control level fully and idle for 2minutes to bleed the air remained in the oil pass tube with the oil drained from the oil pump.

⚠ NOTE

- Do not increase the engine RPM more than required.

Connect the oil control cable.

⚠ NOTE

- Adjust the oil pump if the adjustment nut of the oil comtrol lever is loose.

ENGINE OIL LEVEL INSPECTION

Check the engine oil level if the pilot lamp blinks when the main switch is turned on.

LOW OIL WARNING LIGHT BLINKING LEVEL : 0.15 ℓ

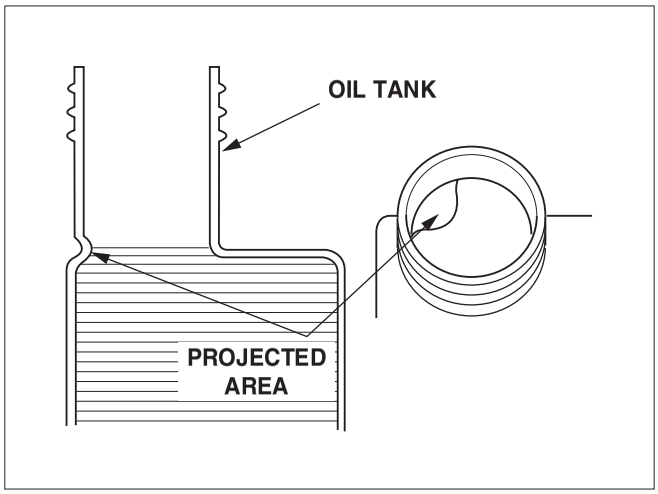

Remove the oil tank cap and fill the oil tank with oil to the level of the projected portion

RECOMMENDED OIL : ULTRA 2 SUPER OIL

Reinstall the oil tank cap and check to see if the pilot lamp turns off when the main swich is turned on.

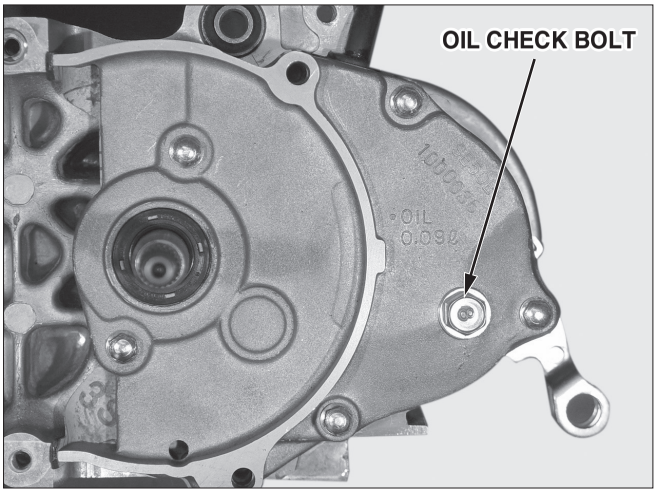

TRANSMISSION OIL INSPECTION

Check the body and the connection of each engine component for any leak.
Remove the oil check bolt and check to see if the oil overflows from the oil check hole.
If only the small amount of oil overflows, fill the recommended transmission oil through the oil filler hole gradually.

⚠ NOTE

- Oil level inspection must be performed in the flat ground with the vehicle being straight by raising the main stand.

RECOMMENDED OIL : SAE 80W / 90

Tighten the oil level check bolt.

TIGHTENING TORQUE : 1.3kgf · m

Start the engine and check for leak.

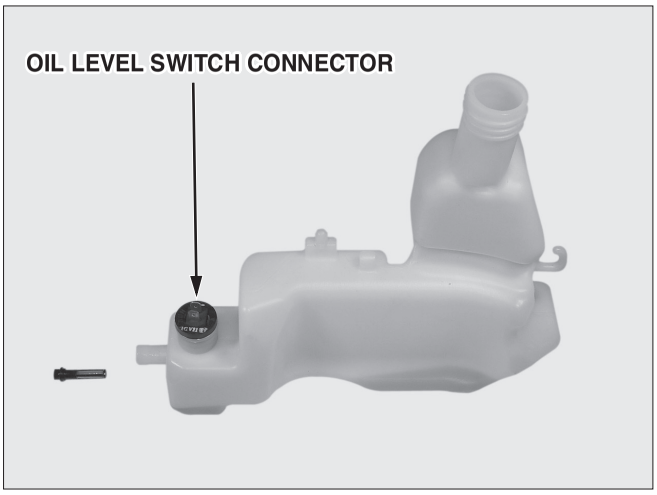

OIL TANK DISASSEMBLY

Remove the luggage box.
Remove the body cover.
Loosen 2 flange bolts securing fuel tank and seatcatch.
Loosen 2 washer bolts of setting stay securing luggage carrier.
Remove the switch connector of oil tank and the tube on the side of oil pump.
Remove the oil level switch connector.
Remove the tube on the side of oil pump.
Install the tube clip or the valve in the oil tube to avoid the oil from leaking.
Remove the flange bolt securing the oil tank and press the left and lower rear fender to remove the oil tank.
Drain the oil from the oil tank.
Remove the oil level switch.
Remove the oil strainer.

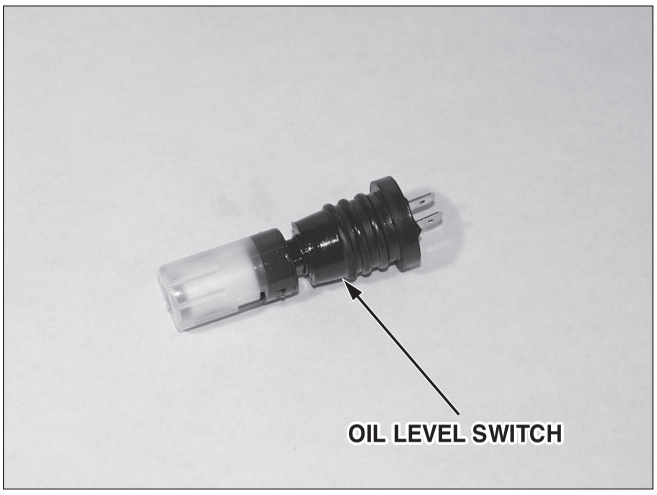

INSPECTION

Check the oil level switch and the oil tube for proper installation.

Install in the reverse order of removal.

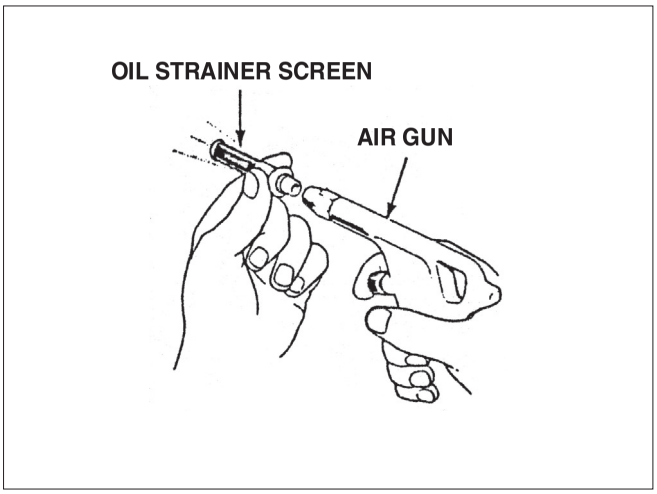

⚠ CAUTION

- If the oil enters into the oil pass, it may cause abnormal lubrication or engine sticking. Always remove the air in the oil pass after maintenance.
- Make sure that the oil tube is connected properly.
- Drain the oil in the clean container.
- Install the oil strainer after cleaning it.

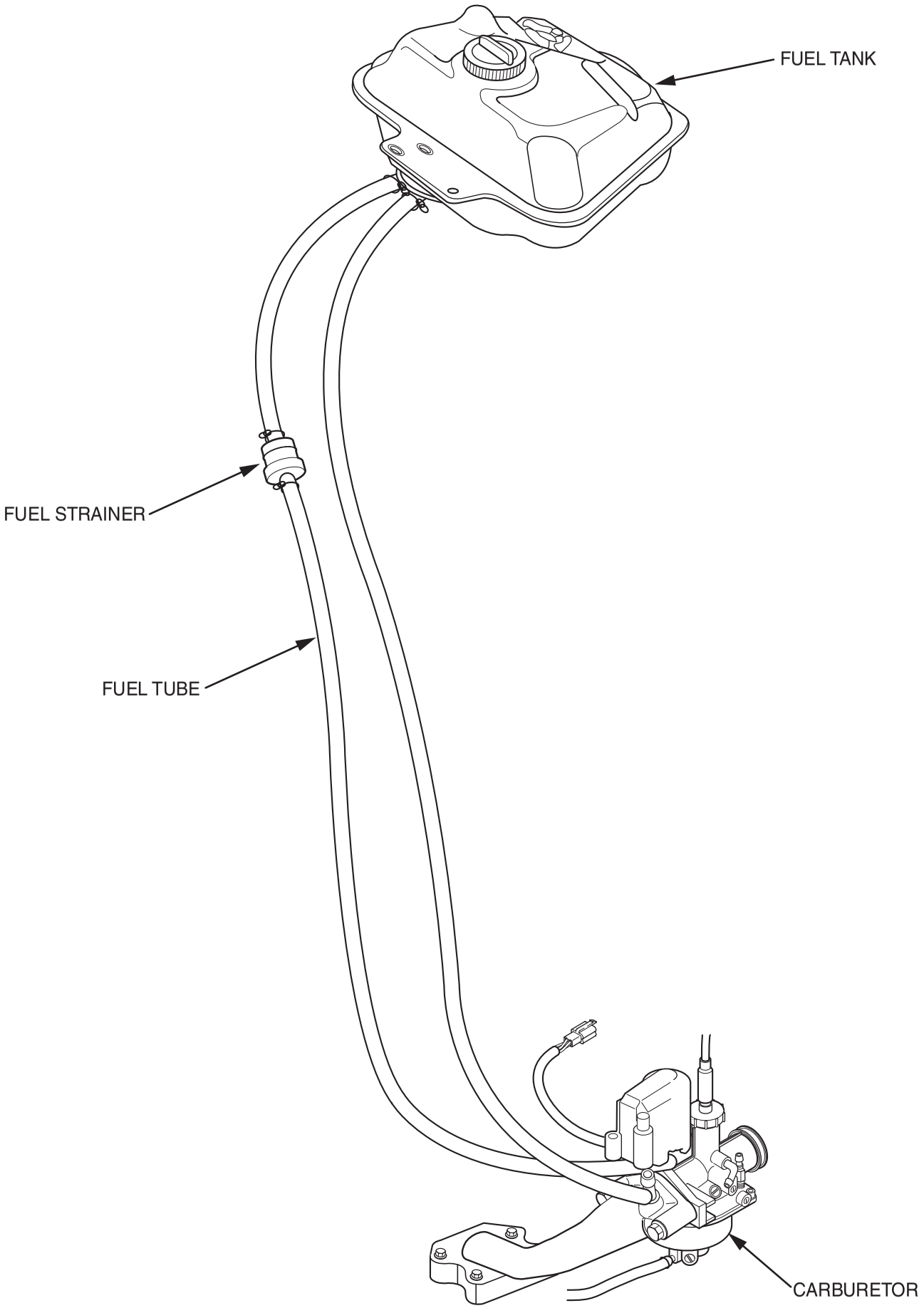
FUEL TANK
FUEL STRAINER
FUEL TUBE
CARBURETOR

5. FUEL SYSTEM

SERVICE INFORMATION · · 5-1
TROUBLESHOOTING · · · · · 5-2
IDLING ADJUSTMENT · · · · 5-2
FUEL TANK · · · · · · · · · 5-3
AIR CLEANER DISASSEMBLE · 5-4
AIR CLEANER ELEMENT DISASSEMBLY · · · · · · 5-4
CARBURETOR REMOVAL/ INSTALLATION · · · · · · 5-5
FLOOT CAAMBER/FLOOT JET REMOVAL/INSTALLATION · · · 5-5
CARBURETOR CLEANNING · · 5-6
CARBURETOR INSPECTION · 5-6
THROTTLE VALVE REMOVAL/INSTALLATION · · 5-7
FUEL AUTOCOCK REMOVAL/INSTALLATION · · · 5-8
INLET PIPE REED VALVE REMOVAL/INSTALLATION · · · 5-9
REED VALVE INSPECTION · · 5-9

SERVICE INFORMATION

GENERAL SAFETY

⚠ WARNING

Gasoline is extremely flammable. Avoid fire in the work place, also paying particular attention to sparks. Furthermore, the evaporated (gasified) gasoline is highly explosive. Work in a well-ventilated areas.
Exhaust gas contains poisonous substance. Do not keep engine running for a long period of time in a closed, or poorly ventilated area.

⚠ CAUTION

Do not excessively bend or twist cable. Distorted or damaged cable may lead to mechanical malfunctions.
Pay particular attention to the position of O-ring. Replace with new ones when disassembled.
If it is desired to store a vehicle for a period longer than 3 weeks, drain gasoline out of the carburetor float chamber. Gasoline left in the float chamber will be deteriorated causing the slow jet to be clogged with deposits, and idling may become unstable.

SPECIFICATIONS

FUEL TANK CAPACITY : 4.8 *l*

CARBURETOR

ITEM	STANDARD	ITEM	STANDARD
TYPE/THROTTLE BORE	PA35	PILOT SCREW OPENING	1 1/2(1 1/8)
VENTURI DIAMETER	14mm	FLOAT LEVEL	12.2
MAIN JET No.	#77(#65)	IDLING SPEED	2,000rpm
SLOW JET No.	#38(#35)	THROTTLE GRIP FREE PLAY	2-6mm

※ "( )" MARKED CONTENTS APPLY TO EUROPE ONLY.

TOOL

FLOAT LEVEL GAUGE

TROUBLESHOOTING

The vehicle does not start.

No gasoline in fuel tank.
Fuel is not coming out of carburetor.
Too much fuel is flowing into cylinder.
No spark emitted from spark plug.
Air cleaner is blocked.
Suction system is experiencing secondary intake of air.
Using low quality gasoline.
Starter is damaged.
Throttle cable is working improperly.
Fuel tank is functioning improperly.

Idle is unstable and engine turns off after starting.

Starter is damaged.
Ignition system is damaged.
Using low qualty gasoline.
Suction system is experiencing secondary intake of air.
Idle is adjusted improperly.
Air screw is adjusted improperly.
Compression pressure is low.
Air/Fuel mixture is either too lean or rich.
Carburetor is blocked.

Mis-firing occurs when driving at high speeds.

Ignition system is damaged.
Mixture is too lean.

Back firing

Ignition system is damaged.
Mixture is too lean.

Insufficient power and high fuel consumption.

Air cleaner is blocked.
Ignition system is damaged.
Mixture is too rich.

Air/Fuel mixture is extremely lean

Fuel jet is blocked.
Float valve is damaged.
Oil level is low.
Bad ventilation of air in tank cap.
Fuel strainer screen is blocked.
Fuel tube is bent, creased or blocked.
Suction system is receiving secondary suction of air.

Air/Fuel mixture is extremely rich.

Air jet is blocked.
Float valve is damaged.
Oil level is too high.
Starter is damaged.
Air cleaner is blocked.

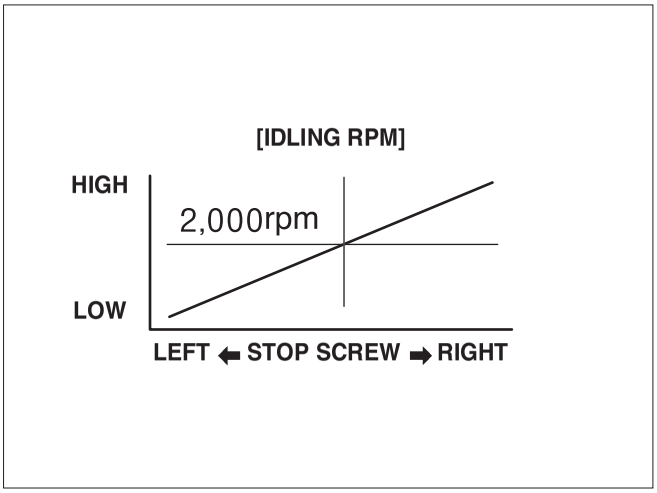

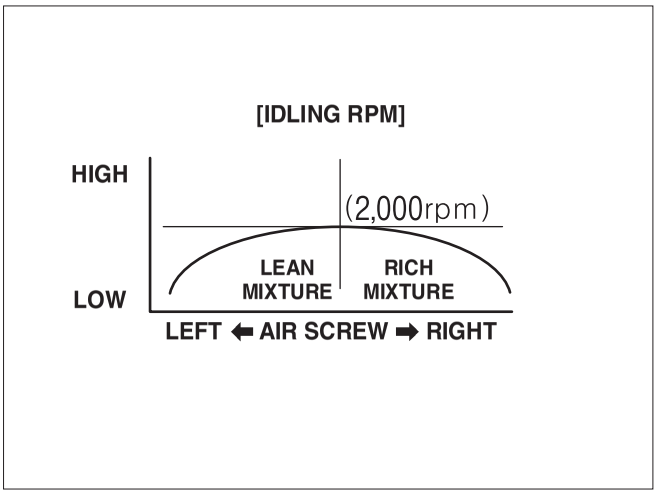

IDLING ADJUSMENT

Travel the vehicle 2~3km under the speed of 50km/h to stabilize the combustion on normal temperature.
Set the main stand on an even place to secure the safety.
Turn the stop screw to adjust the idling speed to 2,000rpm.
Turn the air screw as 1/4 turn to find the highest engine rpm and adjust it to 2,000rpm.
※Turning the air screw right-hand, the fuel will get thicker, and turning left-side, it will be thinner.
As engine speed is set to 2,000rpm by use of air screw, lower the idling speed 20~50rpm.
(Standard air screw: 1 1/2 turn back)
Slightly snap 2~3 times, and set to 2,000rpm by use of the stop screw.
Slightly snap 2~3 times again to increase the stability and smooth the restarting, and complete the adjustment as 1,800~2,000rpm.

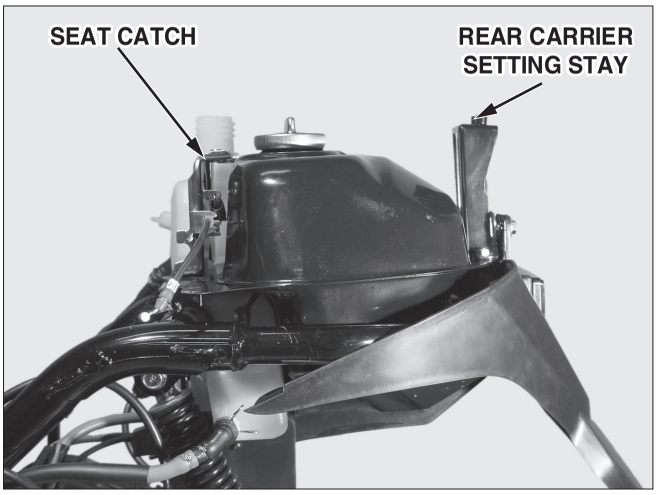

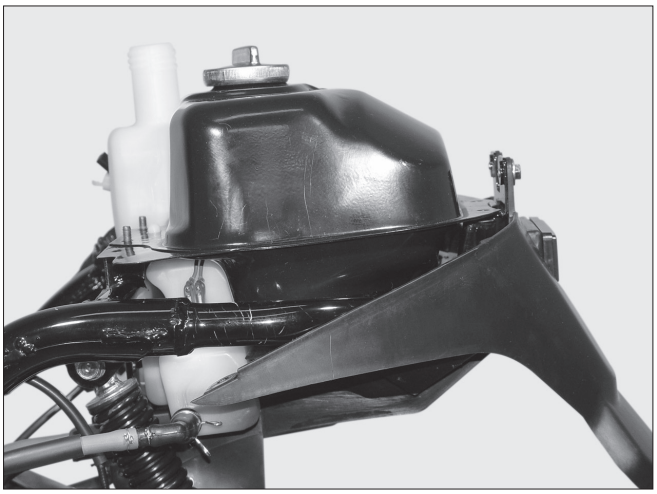

FUEL TANK

REMOVAL

⚠ WARNING

- Gasoline is extremely flammable. Avoid fire during work, and pay particular attention to electric sparks. Furthemore, the evaporated (gasified) gasoline is highly explosive. Work in a well-ventilated areas.

Remove the following parts.
Luggage box. (⇨3-3)
Plug maintenance lid.(⇨3-3)
Center cover. (⇨3-3)
Rear carrier. (⇨3-3)
Body cover. (⇨3-3)
Remove the fuel tube from the fuel auto cock.

⚠ NOTE

- Use the tube clip or the cap to prevent the gasoline from leaking.

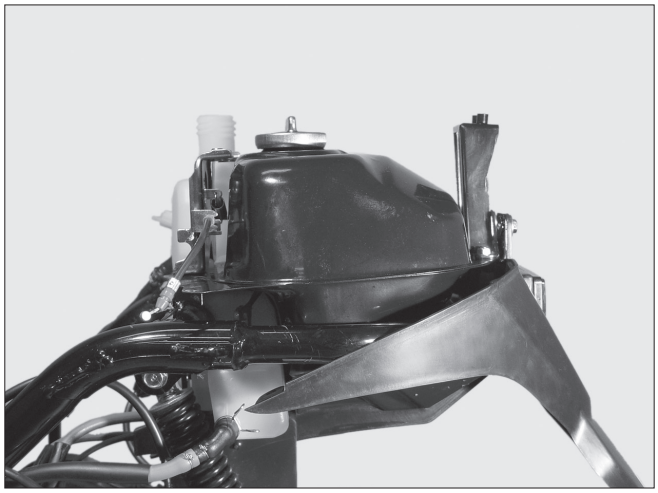

Remove the fuel unit wire coupler.
Remove the rear fender. (⇨3-7)
Loosen the 2 flange bolts and remove the seat catch.
Loosen the 2 flange bolts and remove the fuel tank support stay.
Loosen the 2 flange bolts and remove the fuel tank.

INSTALLATION

Install in the reverse order of removal.

⚠ NOTE

- Check for gasoline leakage.
- Gasoline mark is on the fuel tank cap.
- Check this mark when filling gasoline.

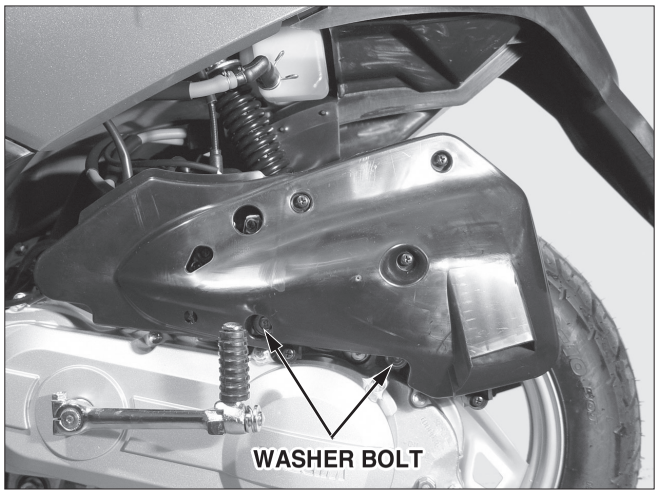

AIR CLEANER ELEMENT DISASSEMBLY

Loosen the 5 air cleaner cover washer screws.
Remove the air cleaner cover.
Remove the air cleaner element.
Install in the reverse order of disassembly.

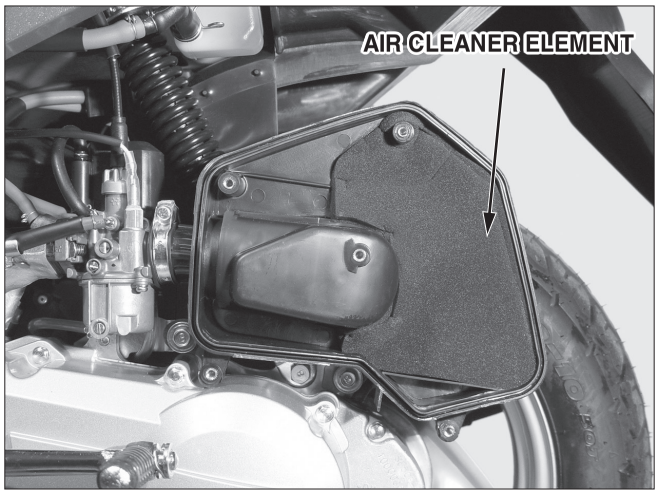

AIR CLEANER REMOVAL

Loosen the air cleaner connecting bend screw pin.
Loosen the 2 bottom air cleaner washer bolts.
Loosen the top rear fender flange bolt.
Remove the air cleaner from the carburetor.
Install in the reverse order of removal.

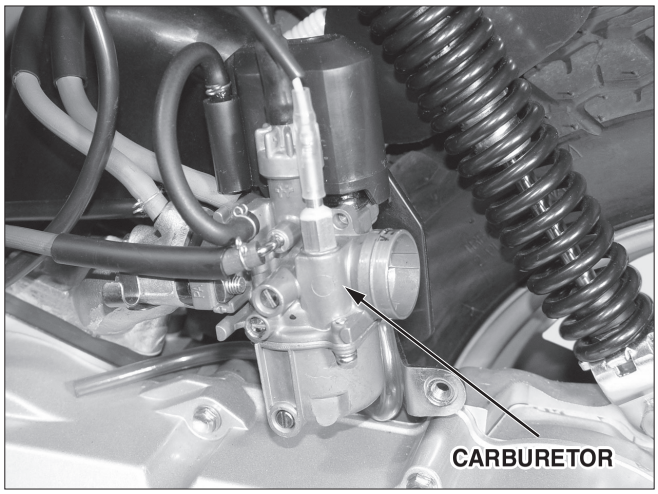

CARBURETOR REMOVAL/INSTALLATION

⚠ NOTE

- Keep the fire away.
- Open the drain screw to drain the gasoline in the carburetor chamber.

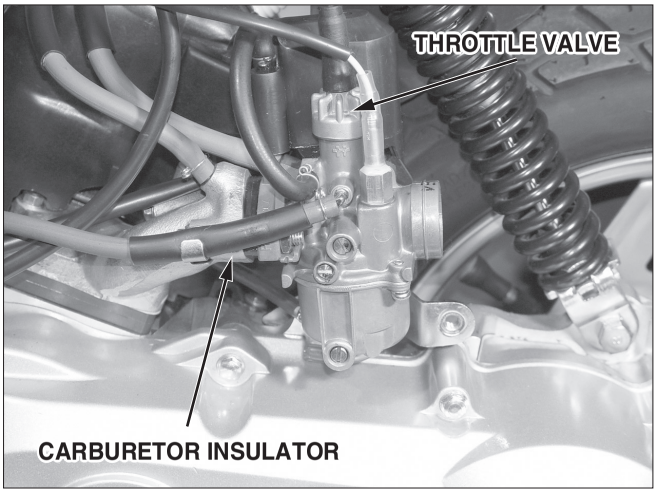

Remove the luggage box. (⇨3-3)
Remove the plug maintenance cover. (⇨3-3)
Remove the center cover. (⇨3-3)
Remove the air cleaner. (⇨5-4)
Remove the wiring coupler of the auto by starter.
Remove the oil pass tube.
Remove the throttle valve set.
Remove the 2 flange bolts securing the inlet pipe.
Remove the carburetor insulator.
Remove the carburetor.
Install in the reverse order of removal.

⚠ NOTE

- Install the carburetor after aligning the throttle valve cutaway and the throttle stop screw.
- Tighten the top set correctly so that it is not released.

CARBURETOR DISASSEMBLY/ASSEMBLY

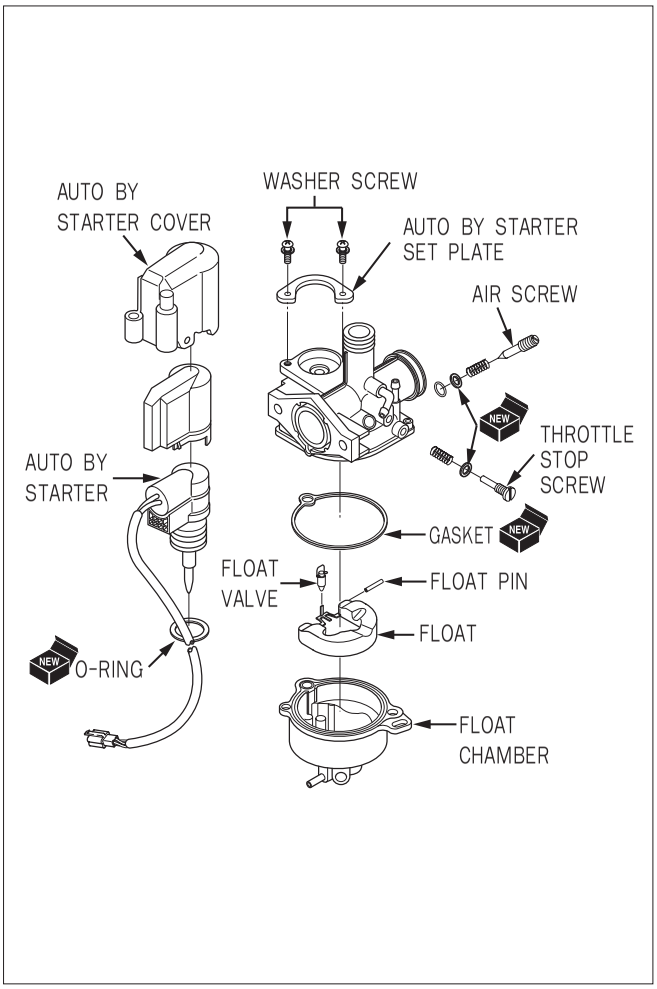

Remove the auto by starter cover.
Loosen the 2 washer screws
Remove the auto by starter set plate.
Remove the auto by starter.
Remove the auto by starter O-ring.
Assemble in the reverse order of disassembly.

⚠ NOTE

- Install the auto by starter in the carburetor body after applying grease to the starter O-ring and then tighten firmly with set plate piece.

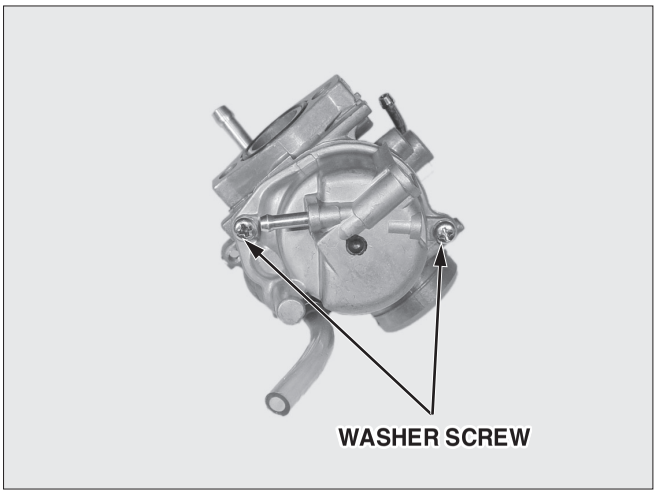

FLOAT CHAMBER/FLOAT/JET DISASSEMBLY/ASSEMBLY

Loosen the 2 float chamber screws.

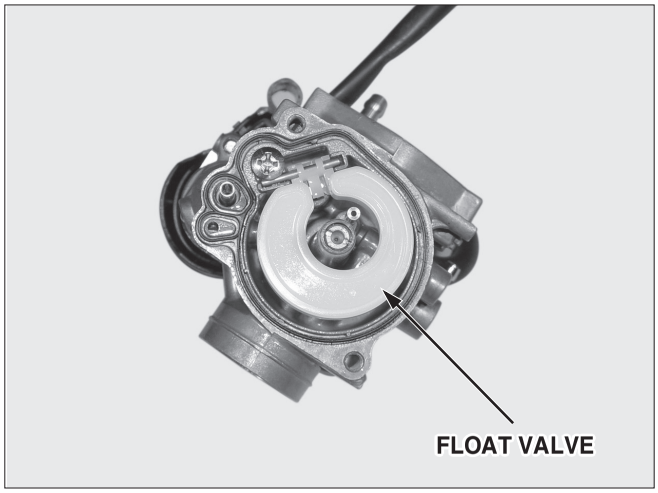

INSPECTION

Check the float valves and seats for cracks or damage.
Check the float valve operation.
Check the float valve level.

FLOAT LEVEL : 8mm

Remove the main jet, needle jet holder, and needle jet, and remove the slow jet.
Remove the air screw, spring, washer, O-ring.
Remove the throttle stop screw, spring, O-ring.

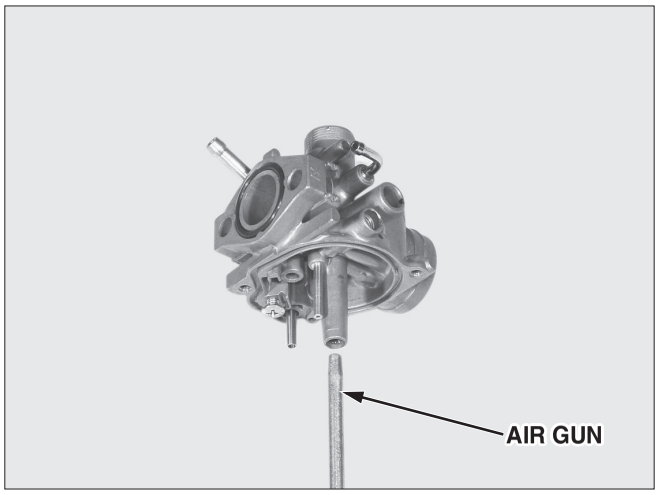

CARBURETOR CLEANING

After removing all parts, blow open air and fuel passages in the carburetor body with compressed air.

⚠ CAUTION

- Cleaning the air and fuel passages with a piece of wire will damage the carburetor body or fuel pump.

Assemble in the reverse order of disassembly.

⚠ CAUTION

- Tightening air screw against its seat will damage the seat.

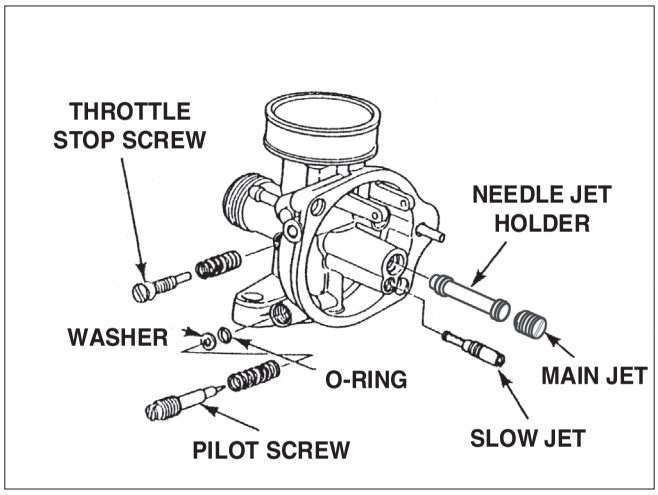

⚠ NOTE

- Be sure to install the needle jet with the smaller hole toward the float chamber.
- Install the air screw and its O-ring and washer in the order as shown in the drawing. If the air screw and carburetor body are replaced with the new ones, adjustment is necessary.

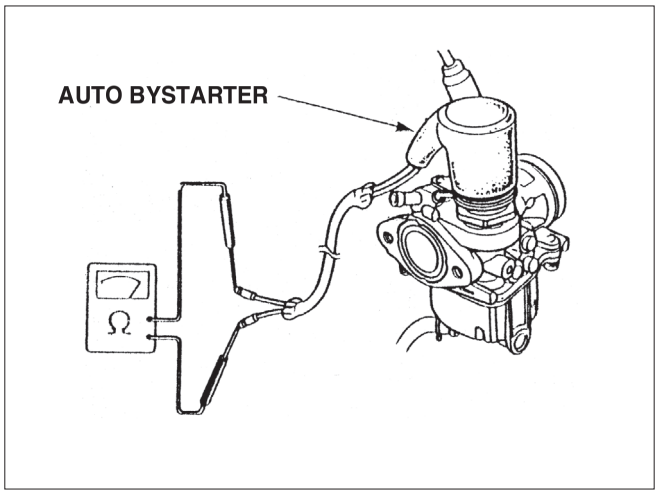

CARBURETOR INSPECTION

Connect an ohmmeter to the auto bystarter wire connector terminals and measure the resistance. If the resistance is greatly out of specification, it indicates a faulty PTC in the auto bystarter. Replace the auto bystarter.

⚠ NOTE

- The auto by starter might be normal if the resistance is only slightly out of specification. However, be sure to check all related parts for trouble.
- Refer to the Model Specific manual for specified resistance.

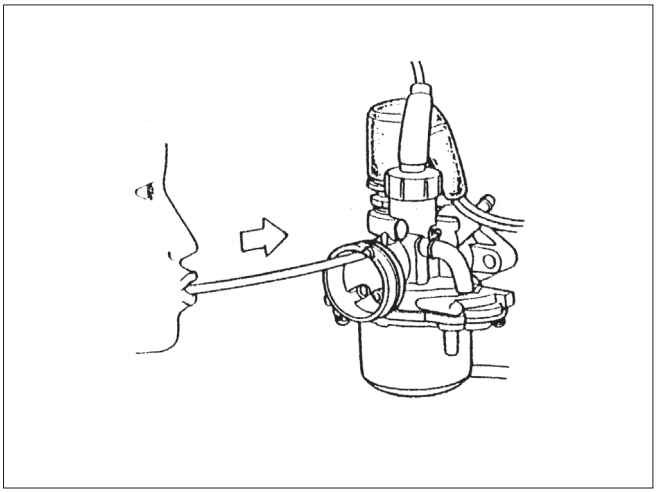

Remove the carburetor and let it cool down for 30 minutes. Insert a vinyl tube into the fuel enrichening circuit and blow into the tube.
Air should flow into the circuit.
If air does not flow into the circuit, replace the auto bystarter.

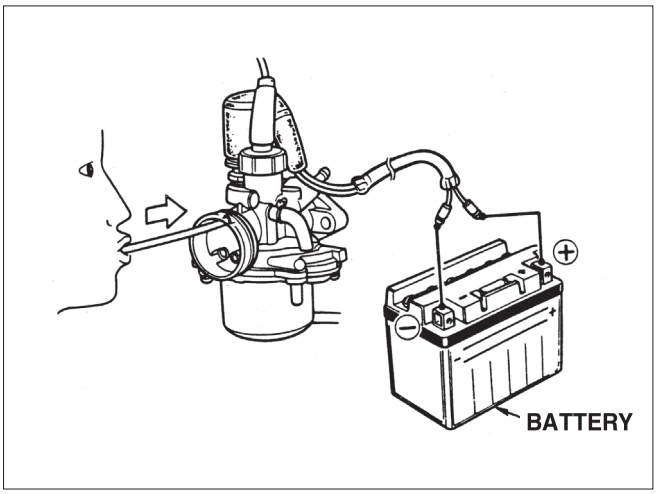

Connect the battery to the auto bystarter terminals and wait for 5 minutes.
Insert a vinyl tube into the fuel enrichening circuit and blow into the tube.
Air should not flow into the circuit. If air flows into the circuit, replace the auto bystarter.

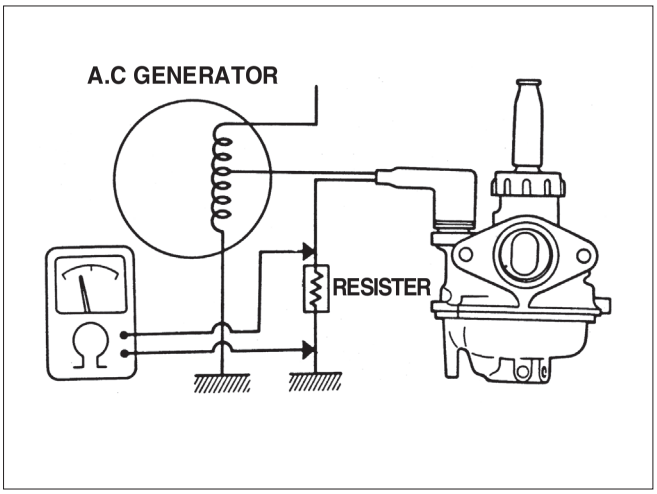

Check the resister if the auto bystarter is normal but engine is still hard to start.
If there is a broken wire in the resister, current will not flow to the PTC and the auto bystarter will not operate.
If there is a shorted wire in the resister, current of a higher voltage than specified will reach the PTC. This will cause the fuel enrichening circuit to close too soon, and starting will be difficult.

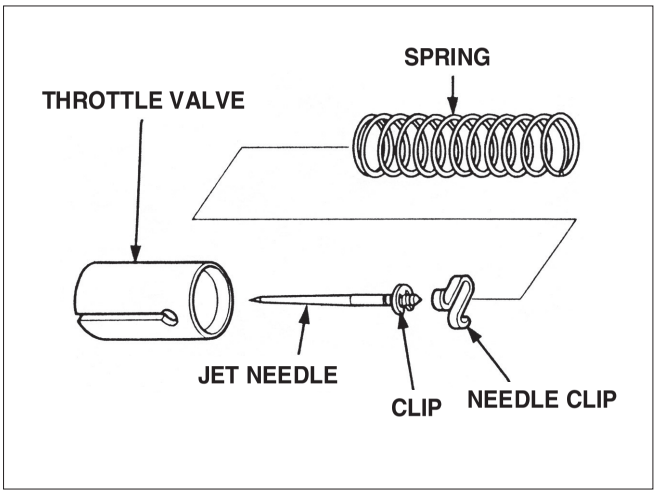

THROTTLE VALVE

DISASSEMBLY

Remove the throttle valve.
Remove the throttle cable.
Remove the throttle valve spring.
Remove the needle clip.
Remove the seal cap.
Remove the clip.
Remove the jet needle.

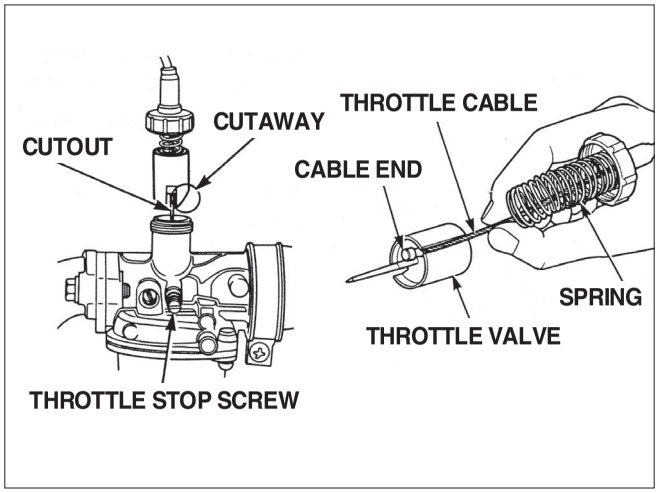

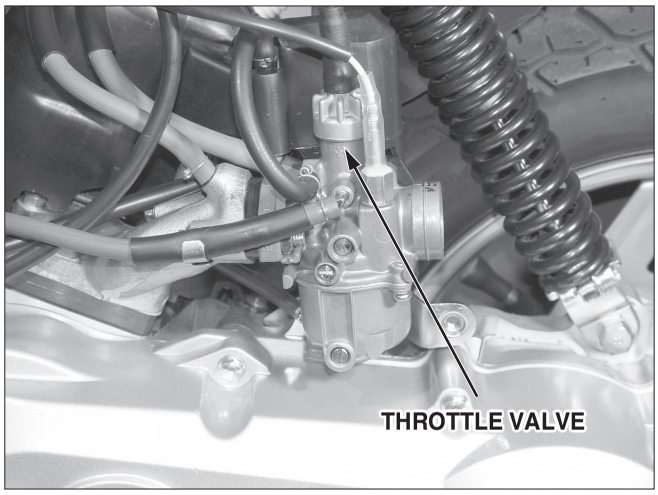

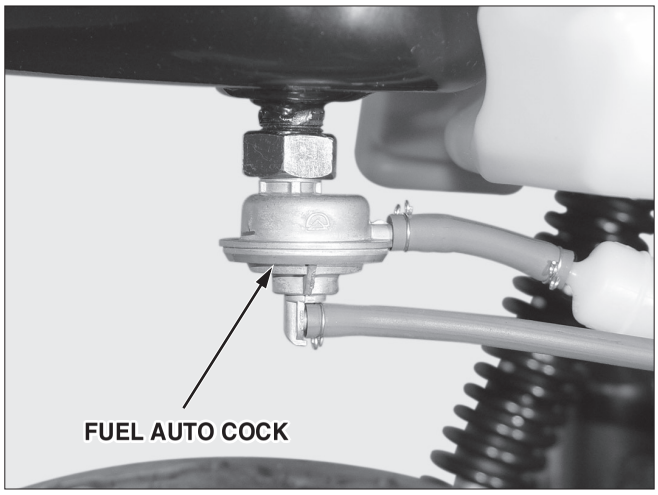

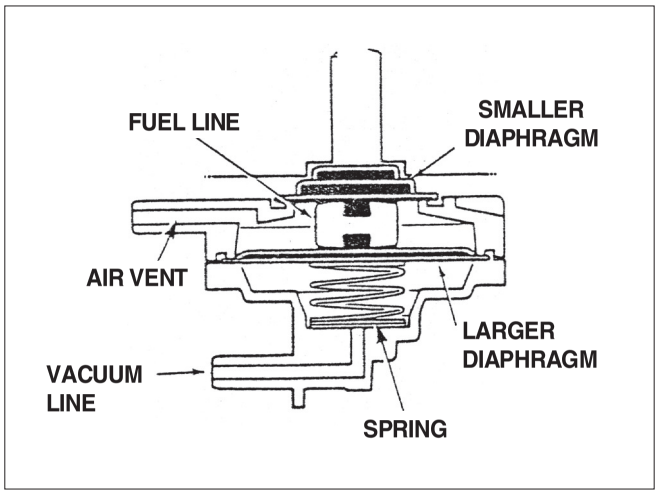

ASSEMBLY

Install the jet needle into the throttle valve and secure with the retainer.
Route the throttle cable through the spring and compress the spring fully.
Attach the throttle cable end to the bottom of the throttle valve and thread the throttle cable through the slot in the valve.
Align the cutout in the throttle valve with the throttle stop screw on the carburetor body and install the valve on the carburetor.

⚠ NOTE

- Be sure that the throttle valve cutaway is toward the air cleaner case side as it determines the volume of air for fuel mixture.

Operate the valve after installing the throttle valve.

FUEL AUTO COCK

REMOVAL/INSTALLATION

Remove the luggage box. (⇨3-3)
Remove the plug maintenance cover. (⇨3-3)
Remove the center cover. (⇨3-3)
Remove the rear carrier. (⇨3-3)
Remove the body cover. (⇨3-3)
Remove the fuel tube A, B connected to the carburetor.
Remove the inlet pipe negative pressure tube.
Remove the fuel tube A, B connected to the fuel tank.
Remove the flange bolt securing the fuel auto cock and the frame.
Remove the fuel auto cock.
Install in the reverse order of removal.

⚠ CAUTION

- Be sure to remove the diaphragms from the fuel auto valve before using compressed air to blow out the air passages. Compressed air wil damage the diaphragms or may force them off the aluminum

Disconnect the fuel line and place it in a clean container as shown.

⚠ NOTE

- Place a clean container under the fuel tube.
- Refer to the Model Specific manual for replacement.

Connect the fuel auto valve vacuum tube to the vacuum pump and apply vacuum. Be sure that the fuel flows out smoothly. If the vacuum does not remain steady, it indicates the diaphragm is incorrectly installed or damaged. If the vacuum remains steady, but the fuel flow is not smooth, it indicates a clogged filter or incorrectly installed diaphragm.
If the fuel flows without the vacuum applied, the diaphragm is incorrectly installed.

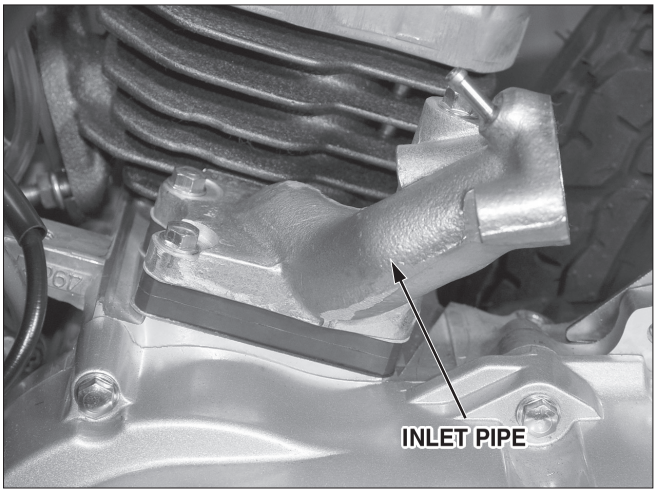

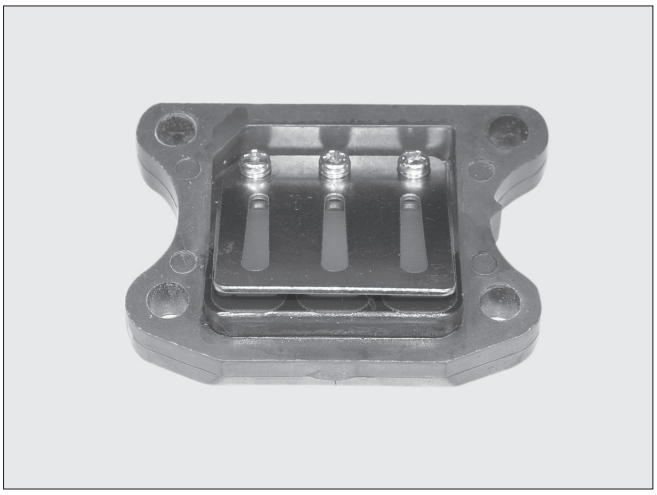

INLET PIPE REED VALVE

REMOVAL/INSTALLATION

Remove the luggage box. (⇨3-3)
Remove the air cleaner. (⇨5-4)
Remove the carburetor. (⇨5-4)
Remove the negative pressure tube connected to the inlet pipe.
Remove the oil pump cable. (⇨4-3)
Remove the fan cover and shroud.
Remove the inlet pipe securing 4 flange bolts connected to the L crank case.
Remove the inlet pipe.
Remove the reed valve.
Install in the reverse order of removal.

INSPECTION

Check the reed valve for fatigue or damage and replace the reed valve assembly if necessary.
Check the reed valve seat for cracks, damage and clearance from the reed and replace the reed valve assembly if necessary.

⚠ NOTE

- Be sure to replace the reed valve as an assembly. Disassembling or bending the reed stopper will cause engine trouble.